Roger W. Arnold W4EHW
221 SW 22nd Ave.
Miami, Fla.

FLORIDA SKIP

A Non-Profit Organization

VOL. 5 — No. 12 | The All Florida Radio Amateur's Publication | MAY, 1962

Dear Mabel:

I saw Homer in the exercise yard the other day and he said you were asking about me.

I am very lonesome. Homer and I are only A.M. guests here.

The SSB boys have priority on admittance and are crowding us out here too.

The F.C.C.* has been training Homer in SSB. He wears a big clothes-pin on his nose and without his uppers he sounds just like the rest of them. He has even learned to walk lop-sided.

Homer planned on getting out on 75 last Saturday. You see, the club's 75 meter drooping doublet is anchored outside the fence, but Homer is too fat to load properly and now he and the doublet are both inside to stay.

I was up for release examination last week but when I told them I wanted to get out and join the staff of Florida Skip, they modified my ID card to Advanced Class and now it looks like I'm here to stay.

161, (love and regards)
L. Q. Slopoth
(*Florida's Caattachootchee Club)

HOMER IS HOME

Dear Mabel:

Homer got released from the hospital last month and it is nice having him home again. Now we're back to normal - solder on the floor and resistors everywhere.

Feast your eyes on the new SKIP five year Field Day Trophy. It stands 29 inches tall finished in gold with walnut base. Rules for Field Day Trophy are same as last year. Full details next month, so all clubs better check over the field day antennas, generators and equipment. Individual single transmitter trophy picture will appear next issue.

CONTEST HUNTERS

The new HALLICRAFTER SSB/CW/VHF Contest is under way. $10,000 in prizes is offered for a written essay of 25 words or less, local winners to be selected by your Hallicrafter dealers. So, "I would like to see more SSB or CW operation on VHF because . . . . . ." Pick up your entry blank at Herman Electronics, Walder Radio, or Electronic Wholesalers, or Amateur Radio Center, Peards, Radio Accessories, or Palin's in St. Pete.

The new Hy-Gain Contest, "Operation Sky-Hook" also looks interesting. This is also a write-in contest. A chance to say what you think about antennas. For money, yet! Get your entry blank from your favorite dealer . . . . if they advertise in Skip, tell them your thankful they make Skip possible. If they don't advertise, it's only because they are too busy - tell them you miss their little reminder.

Watch for the new FLORIDA SKIP contest, "Relay All Counties", which starts January 1st. This is really something new. No QSL cards necessary. Your chance to do something about that QRM on 20 - 40 - 80. Your chance to do something about saving part our 10 meter band. You did know there is a "CB War" on, didn't you?

FLORIDA SKIP, INC.
P. O. Box 501
Miami Springs 66, Florida

Enclosed is $2.00 for 1 year or $4.00 for 3 years for my membership to Florida Skip.

New ☐ Renewal ☐

My CORRECT address is:

Name _____ Call _____

Address _____

City & State _____

FROM THE EDITOR

Well, how do you like the new SKIP format? OK we hope. The publisher, K4LQS pulled a "quickie" on us just before the April publishing date by coming up with it. Note the column lines are shorter by three letters. Since the Collier County Newspaper shifted all their machines to this size column Skip went along too. A different type paper is now being used. It does not have the "gloss" the other type had and is easier to read. Also the pictures should be a little better in the future. We hope you like it.

On the front page is a photo of our new FLORIDA SKIP FIELD DAY TROPHY. It stands about 42 inches high. It's a beauty and we are proud of it. It was on display at the Skip Booth at the Orlando Hamfest where hundreds "aww'ed" it. All Clubs are reminded the rules are the same as last year. We will have more details in the June issue.

The AREC Manual of Operations is finally complete. Months of hard work by the FLORIDA SEC's W4MLE and myself have produced, we think, an excellent manual. Easy to read and complete in detail. If you haven't got a copy, send your QTH and 2 four cent stamps for one. The Manual is free, the stamps will only cover the postage. Each Florida EC will also have a supply on hand if he makes a request through his Section SEC for same. ECs are requested to get in your orders soon as possible - one for each of his AREC members. SKIP will pay the postage to each EC. It is our desire that every active amateur in Florida will have a copy of this Manual before Hurricane Season gets too far along and will keep the Manual on the operation table for ready reference.

SKIP is almost 6 (six) years old. How about a birthday party? 73 AC

A SILENT KEY

We are very sorry to report the passing of Kenny Glass W4AHK of Eustis Florida on Nov. 1st following surgery in a New Orleans clinic.

He had been a ham for over 30 years and held the same call throughout his ham career. A good all-round ham he held a 30 WPM code proficiency certificate which he earned on one of the first qualifying runs from W1AW. Some years ago he was Master Oscillator of the Knights of Kilocycles.

At the time of his death he was executive Vice President of the First State Bank and Trust Company of Eustis.

During WW II he served for several years as a monitoring officer with the F.C.C. and later as a field service representative for Raytheon on Radar.

Please remember Kenny in your prayers. — J. M. "Tiny" Smith, W4BP.

Andy Clark, W4IYT, Editor
P. O. Box 501 Miami Springs

Frank Orcutt, W4JO
Advertising Manager
2752 S. W. Third St.
Miami

Betty Clark, W4GGQ
Business Manager
Box 501 Miami Springs

Second class postage paid at Naples, Florida.

The publishers of this paper do not assume responsibility of tatements made by their advertisers in business competition. All signed articles published in this paper represent solely the individual opinions of the writer and not those of FLORIDA SKIP. Deadline 15th of month in Box 501.

FLORIDA SKIP NOMINATING COMMITTEE: Herb Hamilton K4KDN, 1524 So. Lake Howard Dr., Winter Haven — Herb Ziegler K4LCF, Box 12 New Smyrna Beach — Evelyn D. Gauzens W4WYR, 2780 NW 3rd St. Miami 35.

DEAR MABEL XYL AWARD Anne Pitcher K4RDX, RFD 2, Stuart, Fla.

PERMISSION: Anything in Florida Skip may be reprinted in any other amateur radio publication in the world with a credit line please.

SILENT CARRIER

K4IFR, a retired Navy Cmdr. Chester J. Corrigan died in Miami March 6th at the age of 58.

Chester one of the OOters in Miami who came here from Milwaukee 32 years ago. In World War II, he participated in the European theater, American theater, Asiatic-Pacific campaign and the Phillipine liberation. He was awarded the Pacific Battle Ribbon with seven bronze stars and the Phillippine Liberation Medal with two bronze stars.

K4IFR was a member of AREC, Flamingo Net, QCWA, Dade Emergency Net and others. He was active on all bands and modes including RTTY. He loved to build and design his own equipment. He will be sadly missed by his many amateur friends.

MEMBERSHIP CHANGES OF ADDRESS

Four week's notice is required to effect change of address. When notifying, please give old as well as new address. Advise promptly so that you will receive every issue of FLORIDA SKIP without interruption.

In the future if your SKIP is returned to us by the Post Office Department we'll be forced to remove your name from our mailing list.

FLORIDA SKIP CORRESPONDENTS

Feature, W4TAS, Hank McMurra, 200 Avenue "A" West, Bradenton.

B. A. C. E. S., W4UHY, Art Melvin, 1023 Brandywine St., Jacksonville.

DX, W4LVV, Chuck Bolvin, 2310 SW 27th Lane, Miami 33.

Net, Flamingo, W4DWN, Walt Dixon, 820 NE 123rd St., Miami 61.

NOVICE FORUM, W4UHF, H. Roy Scott, 8643 Twin Lake Blvd., Tampa 4.

VHF in Florida. Allen A. Engleman, W4RWU 2442 Pine Estates Road So., Jacksonville 8, Fla.

Net, FAST and Sidebanders of Florida, Bert Witham W4CNZ Quarters R-6, USN Station, Key West.

Ntt, FLORIDORA, K4RXD, Anne Pitcher, RFD 2, Stuart.

Mabel, P. O .Box 501 Miami Springs 66.

Club, W4BKC, Harold Shea, 7 W. Columbia St., Orlando.

6 meter SSB, W4WAQ, Pat Ferre, 1364 NW 23rd Ct., Miami 35.

Club, W4BAV, Catherine Seeds, 829 — 21st Ave. No., St. Petersburg.

Club, K4GPI, Red Clotfelter, 660 E. 60th St. Hialeah.

Club, Fort Myers, Ken Stewart, W4SMK, Box 463, Ft. Myers.

Club, W4IET, Bob Street, 116 Iroquois Dr., Miami Springs 66.

Hint & Kinks, W4UGC, R. V. Frederick, 460 NW 108th Terr., Miami 50.

SCM — WEST FLORIDA, Frank M. Butler Jr., W4RKH, 494 Elliott Rd., Ft. Walton Beach, Fla.

SCM — Eastern SCM, A. L. Hamel K4SJH, 1300 NE 42nd Ave., Pompano Beach.

SEC — Eastern SEC, Andy Clark W4IYT, 41, Lenape Dr., Miami Springs 66.

SEC — Western SEC, George Thruston W4MLE, 3407 Prock Dr. Tallahassee.

Net, QFN, K4FMA, Don Murray, 1780 NE 146th St., No. Miami 61.

The Old Timer, c/o F.S., P. O. Box 501, Miami Springs 66.

Gold Coast 6 N 2 News, K4RNG, Les Cox, 15140 So. River Dr., Miami 69.

Net. BEN-2 WN4AZZ and WA4-BMC, 1510 17th Ave. No., Lake Worth, Fla.

TIP'S TIPS, G. Curran, W4GJI, Box 48, Palm Beach.

SPARKS 'N' SPUTTERS POEM, Sandy Hastings K4DHD, 66, NE 172 St., North Miami Beach.

Club. Suncoast VHF, L. Johnson, W44EEZ, 6601 Bougainvilla Ave. St. Pete 7, Fla.

Net, Broward Two, Waldo B. Kurtz, 1416 NE 3rd Ave. Ft. Lauderdale. Club, Dade, Jack Wacher W4OBA, Miami.

W. FLA. NEWS, Frank Butler Jr., W4RKH, 494 W. Elliott Rd. Ft. Walton Beach.

RTTY Don Wiggins W4EHU, 7110 Cane Hills Cr., Orlando.

WHY V H F

Quite a bit has been said recently about V H F and UHF. The bands above 50 mc. have become more popular with the event of the Novice and Technician classes of license. Ten years ago 220 and 432 mc work was almost unheard of while today experimentation above 12-15 mc. is going on. Some of the old timers who regarded VHF work as a novelty or passing fancy have been heard themselves on 2 meters. Why all this activity?

It seems that VHF work has a lot more to offer than just local line-of-sight communication. Many VHF'ers are on the band just to break records or make WAS. Impossible? Back in 1956 LU3-EK made contact with JA6FR - a contact of over 12,000 miles on 50 mc. More recently KH6UK and W6NLZ made contact over a path of 2,540 miles on both 144 and 220 mc. Amateurs operating the bands above 50 mc. have found and proven that more modes of propagation are available on the VHF bands than on any of the lower frequencies. By maximum use of these types of propagation, fantastic contacts over tremendous distances are being made all the time.

The amazing part of the whole thing is that you don't need a KW or even a half KW to do it. Through a study, it has been found that the average 6 meter man with 45 watts to a 3 element Yage and a decent receiver has worked at least 25 states. On 2 meters the direct ground wave is even longer than on 6, enabling one with an average station to work 200 to 300 miles away every night. More and more fellows are realizing that improvement at the antenna will add much to the effectiveness of the equipment.

Even the fellow with the Gonset Communicator can work out well. If you don't believe this, listen to the first 55 kcs of 6 meters during a band opening. Amidst the ever present QRM, you'll hear quite a few comments such as, "rig here is a Gooney box III into a three element home-brew beam! These "band openings" that you hear so much about are actually ionized clouds referred to as sporadic E openings. These are the most frequent openings that occur on 50 mc which enable one to work well over 1000 miles on a rig with anywhere from 10 watts up!

The favorite type of propagation with the 2 meter men is the "meteor shower". One reason is that they know precisely when these openings will occur. Every year many different intensities of shower bombardment occur right on schedule. Predictions are made to the hour when these will happen and you can bet your boots that every avid 2 meter DX man is in these on the low end on CW pounding away to keep schedules with a buddy 1000 miles away.

The 220 men thrive on temperature inversions. The phenomenan greatly extends the ground wave range to fantastic distances. Even under normal conditions, contacts up to 300 miles away are made every evenings. Same goes for 432 mc, only the trouble there seems to be that there isn't enough activity to do too much with out schedules.

As you can see, the VHF and UHF bands are an area to be explored. They offer a completely different type of ham radio - in which experimentation and unusual phenomenon exist along with regular rag-chews.

(From AUTO-CALL & CARC CARRIER)

NEW SAMS TECHNICAL BOOKLIST NOW AVAILABLE

Howard W. Sams & Co., announces the availability of its new Spring-Summer Technical Booklist. The 32-page, 2-color catalog contains data on 147 currently - available Sams books on Electronics, TV, Radio, Audio and Hi-Fi, Computors, Electricity, and related subjects.

A Unique feature of the booklet is a 2-page Subject Index, listing titles under the following categories; Amateur Radio; Audio and Hi-Fi; Basic Books; Cummunications; Computers; Electricity; Electronics; Hobbyist Books; Industrial Electronics; Radio Servicing; Reference Books; TV Servicing; Test Equipment; and Transistors and Tubes.

Copies of the new Booklist are available upon request to: Technical Book Division, Howard W. Sams & Sompany, Inc. 2201 East 46th Street, Indianapolis, 6, Indiana.

BETTER COMMUNICATION

(Are you getting tired of us "screaming wolf?" Are you getting tired of reading about how wonderful the CBs are doing? Well, what public service are you performing? Records show many of you are too lazy to sign up in AREC. Read on.)

(CHICAGO)—A nationwide program designed exclusively to provide more efficient two-way radio communications under local emergency conditions has been launched in Chicago.

Called REACT (Radio Emergency Associated Citizens Teams), the movement is a federation of volunteer citizens band radio operators, a group which has grown nationally from 28,000 to 250,000 in the last four years.

Earl W. Gray, National Director of REACT, said organization will maintain National Headquarters in Chicago and have two primary objectives:

1. To provide a round-the-clock radio communications system effectively supplementing police, fire, ambulance, hospital and civil defense efforts.

2. To promote correct and efficient use of citizens band radio. Already functioning in Wisconsin, the REACT concept is currently being carried to all 50 States. As in Wisconsin, most chapter members are expected to come from the ranks of business men, doctors, veterinarians, policemen, firemen, ambulance operators, newsmen, farmers and sportsmen.

Gray said membership is free, with each participant receiving a metalized weatherproof sticker for his automobile, a membership card and periodic bulletins from National REACT Headquarters at 4401 West Fifth Avenue, Chicago. In each city a monitor station will be in operation 24 hours a day for the purpose of relaying messages to the proper authorities.

Gray emphasized that REACT program is designed to supplement the activities of citizens band clubs in existence, not replace them.

Citizens radio was created by the Federal Communications Commission in 1949 to satisfy a need for good, low cost two-way radio transmission by business men. Today any citizen over 18 years of age may operate a private citizens band communications system upon application and receipt of his free radio-station license. No knowledge of code is necessary.

Gray said that citizens radio has proved the difference between life and death in several Wisconsin communities.

(Editors note: The above was sent, as a press release across the Country and to the world. Nice publicity, huh?)

ORLANDO RAMBLINGS
By Hal, W4BKC

Well about the time you read this, the Orlando Hamfest will be history. All the Chairman and members of the various Committees will be in a nice quiet rest home (laughing academy) but don't worry, they'll be out in time to participate in the ARRL Field day. Sure are a hardy bunch. Wonder who is going to take home those two HT-37's???? Eve and I have our tickets and we're hoping just like all the other ticket holders.

Heard a new voice on two meters, Harold, W4WUU with a walloping signal from that Klegg Zeus (180 Watts) hopes to work Jax and Miami, Don't think he will have any trouble doing it either.

Nice to hear Uncle Cliff, W4CFA on the nights, again, Like old Times.

Thought for the Day — Are you an active member, the kind who would be missed, Or are you just contented that your name is on the list?

Do you attend the meetings, and mingle with the flock?

Or do you stay at home and criticize and knock?

Do you take an active part to help the work along,

Or are you satisfied to be among those who "just belong?"

Do you work on Committees to see there is no trick,

Or leave the work to just a few, then talk about the clique?

So come to all the meetings, and help with hand and heart,

Don't be Just a member, but take an active part.

Think this over Sister, Brother, you know right from wrong,

Are you an active member, or do you just belong?

Gordon, W4 AKF says-Love is like a steam radiator, it keeps you warm, even tho it's 90% hot air.

TRAFFIC HOUNDS

(W. FLA - MAR.)

K4VND	155
W4BVE	141
K4BDF	48
W4MLE	48
W4CMG	47
K4ZMV	32
W4WEB	28
WA4FIJ	18
W4GAA	15
K4CNY	234
W4MLE	136
K4CNY	239

TRAFFIC HOUNDS

(E. FLA. MAR)

W3CUL/4	1438	BPL
K4SJH	1156	BPL
WA4BMC	712	BPL
K4AHU	439	
W4DFU	356	BPL O/D
K4COO	338	
K4LCF	322	
K4BY	311	
W4WHK	263	
W4TRS	22	
W4TUB	192	
K4KDN	190	
K4ENW	167	BPL O/D
K4EHW	157	
W4LDM	133	
W4DVR	102	
K4YSN	100	
W4AKB	98	
K4ILB	89	
K4AX	82	
WN4BYP	77	
W4FPC	74	
W4WTO	69	
WN4AME	69	
K4DAX	66	
W4VLH	65	
WN4FNF	57	
W4MIN	57	
W4CNZ	56	
W4VGE	55	
W4HTH	54	
K4AKQ	51	
K4JLO	48	
K4DBT	46	
W4YPX	42	
W4VCX	41	
K4NVD	39	
W4CWD	35	
W4ZAK	34	
K6SXX/4	32	
W4TRU	31	
WA4AZZ	28	
WIAGM/4	27	
K4YOQ	26	
W4AYD	25	
WA4COR	25	
W4BKC	25	
W4IMC	23	
K4QXU	23	
W4HRC	23	
K4JZU	21	
W4IYT	20	
K8KLY/4	20	
K4MTP	20	
WA4BGW	19	
W4WPD	18	
W4DSH	18	
W4LMT	18	
W4BBZ	17	
K4RDX	17	
W4HFR		14
W4LSA		13
K4JWM		12
K4TBG		12
W4QVJ		10
W4EAT		10
K4ZIF		9
W4DDW		8
K4OSQ		8
WA4BGL		8
W4BWR		7
K4CMK		7
K4VGD		5
K4LML		5
W4KIS		5
W4OHA		2
W4RMU		2
WA4AII		2
K4JZX		2
W4YOG		1
Total		**8519**

Late February 1962

W4DUG	2491	BPL
K4AHU	146	
WA4DMV	114	
K4FMA	73	
W4OVE	72	
K4FQP	53	
W4WPD	48	
W4IYT	44	
K4YOQ	43	
W4WTO	29	
K4JWM	16	
W4BBZ	16	
W4HFR	12	
W4DVR	11	
W4UHB	11	
K4JZX	10	
K4MXH	9	
K4OSQ	8	
K4RHL	8	
K4LLI	7	
K4VGD	7	
W4QVJ	6	
K4JZU	5	
WA4AII	5	
W4BWR	4	
W4HLE	2	
W4OHA	1	
Total		**3251**

Late January 1962

W4WPD	17

NET REPORTS

SETN	737	23.77
FMTN	654	24.20
GN	306	9.90
TPTN	261	8.40
FPTN	235	8.70
FAST	64	3.20
VHFTN	52	2.36

RTTY NET GROWS

Don Wiggins, W4EHU, RM-RTTY, E. Fla. of Orlando reports the Florida Radioteletype Emergency Net (FREN) continues to grow. The net recently had 14 check ins from six states. This is excellent RTTY coverage.

FREN has a snappy roll call and takes traffic for any of it's membership. Plans are underway to tie FREN into 4RN through its members who are also cracker-jack c.w. operators.

If you are interested in RTTY, here is your chance to learn how to operate in a RTTY net. Drop W4EHU a line for details, or check in Monday or Friday night at 0223z on 3637kc. Each RTTY station also sends his IH in c.w. so you know who is on if you don't have a converter to copy. Please try to keep the 3637kc spot clear when net is in session.

SMOKE SIGNALS

On location in Arizona, Robert Taylor found an indian sending up smoke signals and asked him how big a fire he usualy built.

"All depends," said the Indian, "hether it's a local or long-distance call." (Hy Garnder in N. Y. Herald Tribune.)

Before boarding a Chicago-to-Cleveland plan, a sales executive had bought a New York paper. His seat partner was a pleasent-looking middleaged women, so when he had read the paper he turned to her and asked, "Care to see a copy of the New York Times?"

"No, thank you," said the lady cheerfully. "I don't know anybody there. (From Akron Beacon Journal.)

OUR ADVERTISERS

Amateur Radio Center, Inc.
2805 N.E. Second Ave.
FR 4-4101
Miami 37, Florida

Electronic Equipment Co.
2701 N.W. 42nd Ave.
NE 5-0421
Miami 42, Florida

Electronic Wholesalers, Inc.
N.W. 27th Ave. at N.W. 95th St.
OX 6-1620
Miami 47, Florida

Electronic Wholesalers, Inc.
1301 Hibiscus Ave.
PA 3-1441
Melbourne, Florida

Gonset Division, YS&W Corp.
801 S. Main St.
VI 9-222
Burbank, California

Herman Electronics, Inc
1365 N.W. 23rd St.
NE 5-0378
Miami 42, Florida

The Ham Shack
2211 N.W. 36th St.
NE 5-0378
Miami 42, Florida

Walder Electronic Distributors
1801 N.E. Second Ave.
FR 9-4794
Miami 32, Florida

Post this near your telephone for ready reference. This paid advertisement helps to pay for your copy, tell them you saw it in SKIP

WILL YOU PLEASE HELP US — ABOUT YOUR CHANGE OF ADDRESS?

On January 10 the postal charge for the return of undelivered **Second Class** mail (your SKIP) was raised from five to ten cents. If you will send us a notice of your change of address beforehand, you will help us to cut costs considerably. So then, to help us save (and also to insure the prompt delivery of your SKIP), won't you please send in your next change of address?

MY NAME .....

OLD ADDRESS .....

NEW ADDRESS .....

WHY V H F

Quite a bit has been said recently about V H F and UHF. The bands above 50 mc. have become more popular with the event of the Novice and Technician classes of license. Ten years ago 220 and 432 mc work was almost unheard of while today experimentation above 12-15 mc. is going on. Some of the old timers who regarded VHF work as a novelty or passing fancy have been heard themselves on 2 meters. Why all this activity?

It seems that VHF work has a lot more to offer than just local line-of-sight communication. Many VHF'ers are on the band just to break records or make WAS. Impossible? Back in 1956 LU3-EK made contact with JA6FR - a contact of over 12,000 miles on 50 mc. More recently KH6UK and W6NLZ made contact over a path of 2,540 miles on both 144 and 220 mc. Amateurs operating the bands above 50 mc. have found and proven that more modes of propagation are available on the VHF bands than on any of the lower frequencies. By maximum use of these types of propagation, fantastic contacts over tremendous distances are being made all the time.

The amazing part of the whole thing is that you don't need a KW or even a half KW to do it. Through a study, it has been found that the average 6 meter man with 45 watts to a 3 element Yage and a decent receiver has worked at least 25 states. On 2 meters the direct ground wave is even longer than on 6, enabling one with an average station to work 200 to 300 miles away every night. More and more fellows are realizing that improvement at the antenna will add much to the effectiveness of the equipment.

Even the fellow with the Gonset Communicator can work out well. If you don't believe this, listen to the first 55 kcs of 6 meters during a band opening. Amidst the ever present QRM, you'll hear quite a few comments such as, "rig here is a Gooney box III into a three element home-brew beam! These "band openings" that you hear so much about are actually ionized clouds referred to as sporadic E openings. These are the most frequent openings that occur on 50 mc which enable one to work well over 1000 miles on a rig with anywhere from 10 watts up!

The favorite type of propagation with the 2 meter men is the "meteor shower". One reason is that they know precisely when these openings will occur. Every year many different intensities of shower bombardment occur right on schedule. Predictions are made to the hour when these will happen and you can bet your boots that every avid 2 meter DX man is in these on the low end on CW pounding away to keep schedules with a buddy 1000 miles away.

The 220 men thrive on temperature inversions. The phenomenan greatly extends the ground wave range to fantastic distances. Even under normal conditions, contacts up to 300 miles away are made every evenings. Same goes for 432 mc, only the trouble there seems to be that there isn't enough activity to do too much with out schedules.

As you can see, the VHF and UHF bands are an area to be explored. They offer a completely different type of ham radio - in which experimentation and unusual phenomenon exist along with regular rag-chews.

(From AUTO-CALL & CARC CARRIER)

NEW SAMS TECHNICAL BOOKLIST NOW AVAILABLE

Howard W. Sams & Co., announces the availability of its new Spring-Summer Technical Booklist. The 32-page, 2-color catalog contains data on 147 currently - available Sams books on Electronics, TV, Radio, Audio and Hi-Fi, Computors, Electricity, and related subjects.

A Unique feature of the booklet is a 2-page Subject Index, listing titles under the following categories; Amateur Radio; Audio and Hi-Fi; Basic Books; Cummunications; Computers; Electricity; Electronics; Hobbyist Books; Industrial Electronics; Radio Servicing; Reference Books; TV Servicing; Test Equipment; and Transistors and Tubes.

Copies of the new Booklist are available upon request to: Technical Book Division, Howard W. Sams & Sompany, Inc. 2201 East 46th Street, Indianapolis, 6, Indiana.

BETTER COMMUNICATION

(Are you getting tired of us "screaming wolf?" Are you getting tired of reading about how wonderful the CBs are doing? Well, what public service are you performing? Records show many of you are too lazy to sign up in AREC. Read on.)

(CHICAGO)—A nationwide program designed exclusively to provide more efficient two-way radio communications under local emergency conditions has been launched in Chicago.

Called REACT (Radio Emergency Associated Citizens Teams), the movement is a federation of volunteer citizens band radio operators, a group which has grown nationally from 28,000 to 250,000 in the last four years.

Earl W. Gray, National Director of REACT, said organization will maintain National Headquarters in Chicago and have two primary objectives:

1. To provide a round-the-clock radio communications system effectively supplementing police, fire, ambulance, hospital and civil defense efforts.

2. To promote correct and efficient use of citizens band radio. Already functioning in Wisconsin, the REACT concept is currently being carried to all 50 States. As in Wisconsin, most chapter members are expected to come from the ranks of business men, doctors, veterinarians, policemen, firemen, ambulance operators, newsmen, farmers and sportsmen.

Gray said membership is free, with each participant receiving a metalized weatherproof sticker for his automobile, a membership card and periodic bulletins from National REACT Headquarters at 4401 West Fifth Avenue, Chicago. In each city a monitor station will be in operation 24 hours a day for the purpose of relaying messages to the proper authorities.

Gray emphasized that REACT program is designed to supplement the activities of citizens band clubs in existence, not replace them.

Citizens radio was created by the Federal Communications Commission in 1949 to satisfy a need for good, low cost two-way radio transmission by business men. Today any citizen over 18 years of age may operate a private citizens band communications system upon application and receipt of his free radio-station license. No knowledge of code is necessary.

Gray said that citizens radio has proved the difference between life and death in several Wisconsin communities.

(Editors note: The above was sent, as a press release across the Country and to the world. Nice publicity, huh?)

ORLANDO RAMBLINGS
By Hal, W4BKC

Well about the time you read this, the Orlando Hamfest will be history. All the Chairman and members of the various Committees will be in a nice quiet rest home (laughing academy) but don't worry, they'll be out in time to participate in the ARRL Field day. Sure are a hardy bunch. Wonder who is going to take home those two HT-37's???? Eve and I have our tickets and we're hoping just like all the other ticket holders.

Heard a new voice on two meters, Harold, W4WUU with a walloping signal from that Klegg Zeus (180 Watts) hopes to work Jax and Miami, Don't think he will have any trouble doing it either.

Nice to hear Uncle Cliff, W4CFA on the nights, again, Like old Times.

Thought for the Day — Are you an active member, the kind who would be missed, Or are you just contented that your name is on the list?

Do you attend the meetings, and mingle with the flock?

Or do you stay at home and criticize and knock?

Do you take an active part to help the work along,

Or are you satisfied to be among those who "just belong?"

Do you work on Committees to see there is no trick,

Or leave the work to just a few, then talk about the clique?

So come to all the meetings, and help with hand and heart,

Don't be Just a member, but take an active part.

Think this over Sister, Brother, you know right from wrong,

Are you an active member, or do you just belong?

Gordon, W4 AKF says-Love is like a steam radiator, it keeps you warm, even tho it's 90% hot air.

TRAFFIC HOUNDS

(W. FLA - MAR.)

K4VND	155
W4BVE	141
K4BDF	48
W4MLE	48
W4CMG	47
K4ZMV	32
W4WEB	28
WA4FIJ	18
W4GAA	15
K4CNY	234
W4MLE	136
K4CNY	239

TRAFFIC HOUNDS

(E. FLA. MAR)

W3CUL/4	1438	BPL
K4SJH	1156	BPL
WA4BMC	712	BPL
K4AHU	439	
W4DFU	356	BPL O/D
K4COO	338	
K4LCF	322	
K4BY	311	
W4WHK	263	
W4TRS	22	
W4TUB	192	
K4KDN	190	
K4ENW	167	BPL O/D
K4EHW	157	
W4LDM	133	
W4DVR	102	
K4YSN	100	
W4AKB	98	
K4ILB	89	
K4AX	82	
WN4BYP	77	
W4FPC	74	
W4WTO	69	
WN4AME	69	
K4DAX	66	
W4VLH	65	
WN4FNF	57	
W4MIN	57	
W4CNZ	56	
W4VGE	55	
W4HTH	54	
K4AKQ	51	
K4JLO	48	
K4DBT	46	
W4YPX	42	
W4VCX	41	
K4NVD	39	
W4CWD	35	
W4ZAK	34	
K6SXX/4	32	
W4TRU	31	
WA4AZZ	28	
WIAGM/4	27	
K4YOQ	26	
W4AYD	25	
WA4COR	25	
W4BKC	25	
W4IMC	23	
K4QXU	23	
W4HRC	23	
K4JZU	21	
W4IYT	20	
K8KLY/4	20	
K4MTP	20	
WA4BGW	19	
W4WPD	18	
W4DSH	18	
W4LMT	18	
W4BBZ	17	
K4RDX	17	
W4HFR	14	
W4LSA	13	
K4JWM	12	
K4TBG	12	
W4QVJ	10	
W4EAT	10	
K4ZIF	9	
W4DDW	8	
K4OSQ	8	
WA4BGL	8	
W4BWR	7	
K4CMK	7	
K4VGD	5	
K4LML	5	
W4KIS	5	
W4OHA	2	
W4RMU	2	
WA4AII	2	
K4JZX	2	
W4YOG	1	
Total		**8519**

Late February 1962

W4DUG	2491	BPL
K4AHU	146	
WA4DMV	114	
K4FMA	73	
W4OVE	72	
K4FQP	53	
W4WPD	48	
W4IYT	44	
K4YOQ	43	
W4WTO	29	
K4JWM	16	
W4BBZ	16	
W4HFR	12	
W4DVR	11	
W4UHB	11	
K4JZX	10	
K4MXH	9	
K4OSQ	8	
K4RHL	8	
K4LLI	7	
K4VGD	7	
W4QVJ	6	
K4JZU	5	
WA4AII	5	
W4BWR	4	
W4HLE	2	
W4OHA	1	
Total		**3251**

Late January 1962

W4WPD	17

NET REPORTS

SETN	737	23.77
FMTN	654	24.20
GN	306	9.90
TPTN	261	8.40
FPTN	235	8.70
FAST	64	3.20
VHFTN	52	2.36

RTTY NET GROWS

Don Wiggins, W4EHU, RM-RTTY, E. Fla. of Orlando reports the Florida Radioteletype Emergency Net (FREN) continues to grow. The net recently had 14 check ins from six states. This is excellent RTTY coverage.

FREN has a snappy roll call and takes traffic for any of it's membership. Plans are underway to tie FREN into 4RN through its members who are also cracker-jack c.w. operators.

If you are interested in RTTY, here is your chance to learn how to operate in a RTTY net. Drop W4EHU a line for details, or check in Monday or Friday night at 0223z on 3637kc. Each RTTY station also sends his IH in c.w. so you know who is on if you don't have a converter to copy. Please try to keep the 3637kc spot clear when net is in session.

SMOKE SIGNALS

On location in Arizona, Robert Taylor found an indian sending up smoke signals and asked him how big a fire he usualy built.

"All depends," said the Indian, "hether it's a local or long-distance call." (Hy Garnder in N. Y. Herald Tribune.)

Before boarding a Chicago-to-Cleveland plan, a sales executive had bought a New York paper. His seat partner was a pleasent-looking middleaged women, so when he had read the paper he turned to her and asked, "Care to see a copy of the New York Times?"

"No, thank you," said the lady cheerfully. "I don't know anybody there. (From Akron Beacon Journal.)

OUR ADVERTISERS

Amateur Radio Center, Inc.
2805 N.E. Second Ave.
FR 4-4101
Miami 37, Florida

Electronic Equipment Co.
2701 N.W. 42nd Ave.
NE 5-0421
Miami 42, Florida

Electronic Wholesalers, Inc.
N.W. 27th Ave. at N.W. 95th St.
OX 6-1620
Miami 47, Florida

Electronic Wholesalers, Inc.
1301 Hibiscus Ave.
PA 3-1441
Melbourne, Florida

Gonset Division, YS&W Corp.
801 S. Main St.
VI 9-222
Burbank, California

Herman Electronics, Inc
1365 N.W. 23rd St.
NE 5-0378
Miami 42, Florida

The Ham Shack
2211 N.W. 36th St.
NE 5-0378
Miami 42, Florida

Walder Electronic Distributors
1801 N.E. Second Ave.
FR 9-4794
Miami 32, Florida

Post this near your telephone for ready reference. This paid advertisement helps to pay for your copy, tell them you saw it in SKIP

WILL YOU PLEASE HELP US — ABOUT YOUR CHANGE OF ADDRESS?

On January 10 the postal charge for the return of undelivered **Second Class** mail (your SKIP) was raised from five to ten cents. If you will send us a notice of your change of address beforehand, you will help us to cut costs considerably. So then, to help us save (and also to insure the prompt delivery of your SKIP), won't you please send in your next change of address?

MY NAME .....

OLD ADDRESS .....

NEW ADDRESS .....

HIGHEST TRADES – EASY TERMS UP TO 36 MONTHS
TEN DAY TRIAL IN YOUR SHACK – MONEY BACK GUARANTEE

COLLINS

310B-1	$ 79.50
75A-1	249.00
75A-3	375.00
32V-3	395.00
32S-1	560.00
KWM-1 with acc.	665.00
KWS-1	950.00
KWM-2 with acc.	1,200.00
51S-1	1,400.00

GLOBE

755A Fact. Wired	39.00
6-2 VFO Wired	39.00
680A	69.00
300A	249.00

GONSET

6 Meter — Linear	89.00
G-77 With Supply	149.50
Com-3 — 6 Meter	189.00
G-77A With Supply	199.00
GSB-101	259.00
G-76	299.00

HALLICRAFTERS

S38E	47.50
S-76	89.00
SX-43	99.00
SX-111	189.00
SR-34	279.00
SX-101 Mk 3	259.00
SX-101A	299.00
HT-37	395.00

HAMMARLUND

HQ-110C	$ 179.50
SP-600JX	399.00

HARVEY WELLS

TBS-50C, VFO, P Sup.	69.50

HEATH

QF-1	6.95
DX-35	37.50
CA-1	12.50
DX-40	49.50
MR-1	115.00
MT-1	125.00
Seneca	159.00

JOHNSON

Viking Mobile	69.00
Viking Valiant	295.00
Viking 500	525.00

NATIONAL

S. O. J.	9.95
2M Convertor	24.50
NC-240D, Speaker	139.50
NC-300, Cal. Spkr.	239.50

P & H

LA-400C	169.50

RME

4350 With Speaker	169.00

AT THE ONLY EXCLUSIVE HAM STORE IN MIAMI
OWNED AND OPERATED BY HAMS – FOR HAMS

AMATEUR RADIO CENTER, INC.

2805 N.E. SECOND AVENUE, MIAMI, 37, FLORIDA

MIAMI PHONE DIAL
FR 4-4101

WEST PALM BEACH
DIAL OPERATOR — ASK FOR
FORT LAUDERDALE **WX 6120**

FT. LAUDERDALE, ETC.
DIAL
524-4484

Open all day Saturday and also until 9:00 p.m. on Friday

For Ready Reference — Tack This In Your Shack!

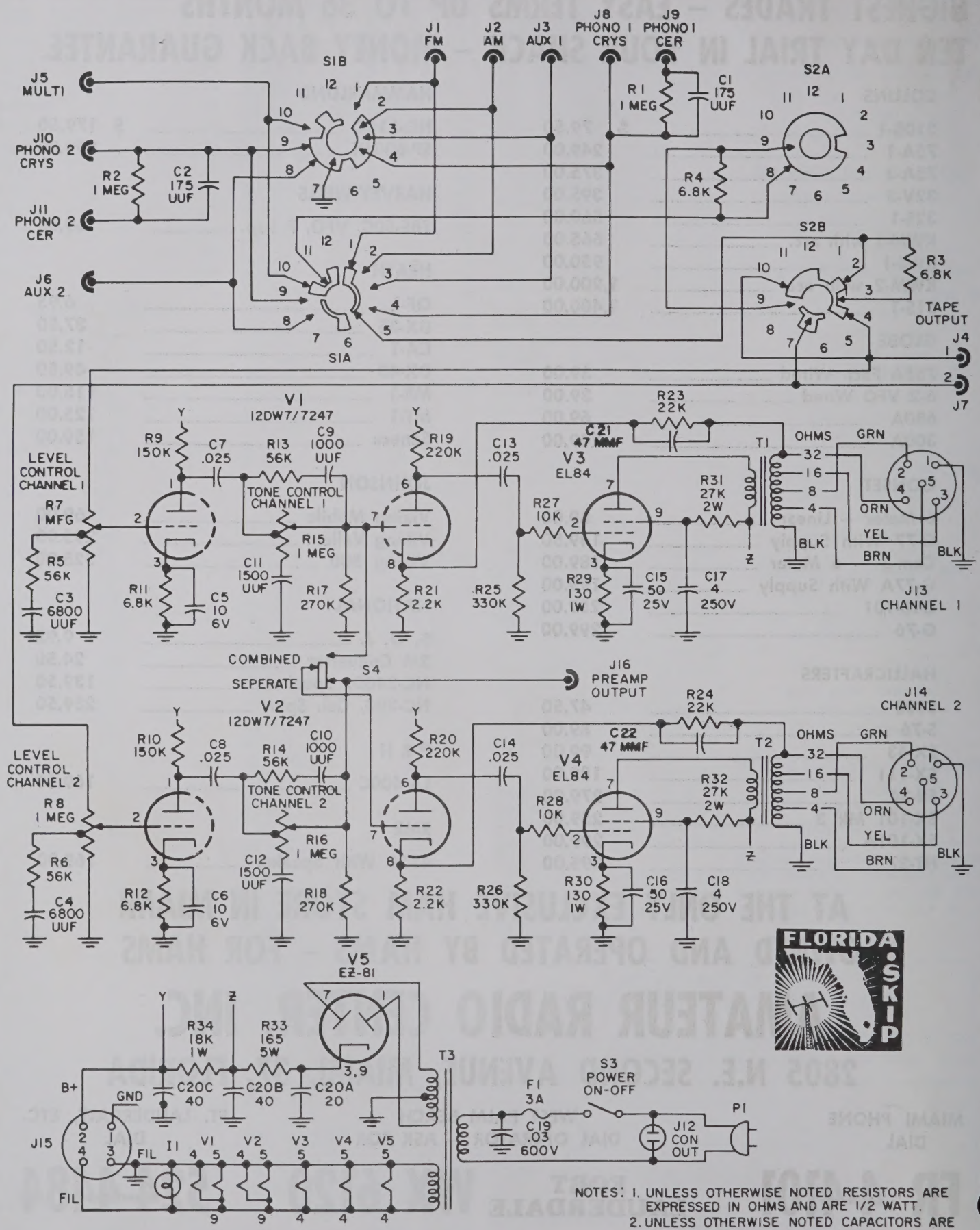

NOTES: 1. UNLESS OTHERWISE NOTED RESISTORS ARE EXPRESSED IN OHMS AND ARE 1/2 WATT.
2. UNLESS OTHERWISE NOTED CAPACITORS ARE EXPRESSED IN MICROFARADS.
3. S1 AND S2 ARE VIEWED FROM FRONT.

SCHEMATIC DIAGRAM OF EICO MODEL AF-4 COMPLETE STEREO DUAL AMPLIFIER

FLAMINGO NET NEWS

Walt Dixon W4DWN

"What causes a transmission line to show reactance at its input terminals"?? This question and 19 others like it were the feature of the Flamingo Net's recent On-The-Air-Contest. The winner believe it or not was an xyl, W4WYR-Evelyn, with 19 out of a possible 20 answers correct. Some of the largest brains of the Net were in there pitching but it took a xyl to beat them. HI! Second closest was K4ZEA-Mickey and following him was W4-EDP-Jim, both with 17 out of 20. The winner received a brand new American Call Book. Congratulations go to the winner for a fine job as only one half hour time limit was allowed for rounding up the answers. Everyone had a very interesting and informative evening and we owe it all to our fine Activities Chairman K4YSS-Paul.

A rough draft of the new By-Laws of the Net have been drawn up, and members of the By-Laws Committee are now going over it making additions and deletions. Another meeting of the full committee will take place in a few weeks to go over the suggested changes to the rough draft and then present it to the full membership of the Net. It is hoped that it will be approved in its final form without too much objection as getting out these type of Laws is quite a hard job. You cannot please everyone. HI! The Net never had a full set of By-Laws before and it was decided at the last Annual Meeting to make up a set.

I hope you all are taking advantage of the Official Calling and Answering Freguency of 28.8mc here in the Miami area as it does pay off when used. If there is anyone on 10 meters you will sure meet him on that frequency. Activity has been rather slow of late and I hope it will pick up again as a Dead Band is a Lost Band to Amateur operators. Remember ole 11 meters??! Don't wait for someone else to get on there calling CQ. YOU TAKE THE INITIATIVE! Call on 10 as often as time permits. Lets have more action and less talk. 10 is open every day of the week in the afternoons and sometimes in the mornings to South American countries and to W6, W7, W areas plus sporadic-E openings up the East Coast. All it takes is INTEREST! Get in there and see just how many you can work on a supposed DEAD BAND. (I'll get off the soap box now!)

Does anyone need a good HRO receiver??? Well, K4-OCF-Fred has one for sale and it is in very fine condition and he would like to get rid of it as he has gone to Collins gear. How about it, anyone interested?

Was talking to W4RID-Johnny the other night, and he reports that he is planning to build a perch up on his new tower pole and instead of buying an expensive brake rotator for his beam he is going to have his xyl Connie to get up there and use her to rotate his beams and such! HI! Says he is going to patent the idea! HI!

W4PCD-Joe reports that he worked a VE4 up in Manitoba with his new mobile the other day with FB reports. Also he is going for a commercial 1st phone license shortly. Got a new VOM for the shack here recently also. Good Luck Joe!

W4LSA-Al is working on a 432mc rig and would like contacts with anyone else in the area that is using 432mc gear. Is there anyone interested in helping Al?? Al is also whipping up some equipment for a Ham TV station. Gud Luck Al!

WA4DWS-Dick is running phone patches with his new phone patch and having a lot of fun doing so. Also reports that he has received the Worked All Silverbell Certificate. Dick says that he has finally got the state of Utah to complete his W.A.S. Congrats Dick!

W4BWP-OB has got his beam all tuned up now to where he is very satisfied with it and says it is working out FB. OB is running a folded driven element on his three element 20 meter bam. Watch out DX!

That is all for now folks am running over too far now but this Net is boiling with activity and we want you all to know what is going on with the Net and it's members. B C N U next month and see you all on Fridays 7:30 PM 29.044MC at the Flamingo Net meeting on the air.

Walt Dixon W4DWN

LETTER TO EDITOR

Editor, Florida Skip:

As I have accepted a position with the U. S. Border Patrol, I will have to give up being Skip's Rep. for this area. I will be moving to New Orleans the latter part of March.

I have certainly enjoyed writing for SKIP and hope I have contributed a little towards making it a better paper. I will contact W4SHW and ask him to keep you informed on the Bishop Case. Also I will do my best to find someone here to continue with the Pensacola's articles for SKIP.

Wishing you and the Skip readers the best of luck in the future.

73 J. B. Hillard, K4SWQ

(Editors note. Sorry you are leaving us JB. Good luck with new position. Your "Bolice Throws Amateur in Jail for TVI" story kicked up a lot of dust Many editors throughout the country are awaiting the results of the case. Good a eye on the borders. AC)

LETTER TO EDITOR

Editor Florida Skip:

Was sure surprised today when I opened the mail and much to my surprise I received an award. The first one I ever received in my life.

I wish all who participated in this, my appreciation and hope some day to personally thank you. Never miss reading Florida Skip and sure like Mabel newsy column.

I am the only one in the family who is not a ham or SWL. Just don't find time—maybe someday —. I help solder — also help with antenna, etc. Like all the XYL's. But as soon as I put any electrical equipment in a socket — I blow fuses. I have mastered part of the code and language, but that is about as far as I have got.

We have had a lot of snow and below zero weather here in 9 land. Hear down where you are in 4 land it is pleasant.

Many thanks again.

Hannah Baer, XYL W9ACE
MYL of K9TVA-Chicago
(M) Meaning Mamma)

THE INTERNATIONAL HAM-HOP

What is it? A new kind of dance? No, it is an organization, and a remarkable idea. It is a chance for radio amateurs to meet their overseas buddies in person, and complete the personal contact that was started by air. The International Ham-Hop Club has nearly 500 members in 50 countries, and exists for the purpose of making it easier for them to visit each other. Each member agrees to put up other visiting members for not more than 2 nights per year (although a longer stay is possible if the host agrees). In return, he gets to use the facilities of the Club anywhere in the whole world where there are members, as often as he wishes. This has three results:

(1) The traveler obtains an insight into the life of the society visited, by sharing it in the homes of its people. He obtains a cross section of home life and amateur radio in that area. The well-known commercial tour only shows one the inside of hotels, and these are the same all over.

(2) The traveler has contact with others having common interests. This makes the experience more rewarding from the first. His personal needs and particular interests are often catered for in advance, and special meetings of radio amateurs and tours of special interest are arranged for his benefit. If the visitor wants to see 'the inside of the city', his hosts can show him choice restaurants, non-tourist-plagued scenery, and other points of interest. His hosts can give him a feeling for the locality and its people which would be difficult to attain from the commercial tour.

(3) There is a considerable reduction of travel expenses. And if a car or hitch-hiking is used, it costs even less. Hitch-hiking is a practical form of transportation in many countries outside of the U.S.A., particularly in Europe.

How did this all begin? G3CED and numerous radio contacts in Germany agreed that it ought to be possible for a ham to travel the length of that country, using only radio amateur facilities for accomodations. Was it practical? In the summer of 1956, G3CED tried it, and toured the Rhine Valley and Black Forest, all on a 49 cc 'Moped' Motor Scooter! It was a tremendous success, and they decided to formalize it; the Club was the result, with G3-CED as General Secretary. The Club met with enthusiastic support in Great Britain, Germany, and Northern Europe; less so in Southern Europe. A few years ago it spread to the U.S.A. and Canada, and recently has included Mexico.

Our North American memberships is now approximately four dozen, which isn't much, but we are fairly well spread out. When GD3MIK visited us recently, he was able to have hosts as soon as he landed in Boston (ie, us). He was then hosted by one of our members in New York and several of our members scattered down the St. Lawrence River in Canada, and he is now Ham-Hopping in the midwest. He will eventually get out to California where we are pretty thinly represented, but on the way he will stop at the homes of members in Mo., Nebr., Kan., and Nevada, and in Utah if we can persuade the recent enquirer from the latter state to join us.

In the summer of 1960 my wife and I took a marvelous European vacation. we visited Ham-Hops in England, France Belgium, and Germany, and stayed in youth hostels in Austria and Italy. We went down as far as Rome, and then back up through France to England again. We hitch-hiked all the way, and the trip cost $2.80 each per day! (We met some people who did it on $1.50 each per day, but that did not allow for occasional luxuries and souvenirs). We were able to get directly into the homes of the people we visited, and we pitied the tourists we saw who glimpsed only the superficial aspect of their visits. To our surprise we were even hosted by people who had no intention themselves of traveling, but who enjoyed seeing the world come to their own doorsteps.

The facilities of the Ham-Hop Club make travel not only more possible, but far more enjoyable. The more members we get, the better it will work. 73 Lee Gunther W6THN/1, Biology Dept., Brown University, Providence 12, R. I. (Editor's note: The Florida Rep of Ham-Hop is H. W. Doddington, K4QHC, 302 SE 9th St., Hollandale, Fla. If interested in details for joining drop Mr. Gunther or Doddington a line. Ham-Hop also publishes a Newsletter.)

THE STATION KEY 1844-1961

Of all the instruments on your operating table the only one that either Morse or Marconi would recognize almost instantly is the key, not the Bug so much as that hand key. It has, over the past 117 years changed only once radically, and that was almost at once when it was found in the first year, that the lever moving on a pivot would operate easier and faster than the stiffer "Strap-Type" first evolved.

Since that time only the curving of the lever down towards the table and the addition of the circuit closing switch have changed it. While their are 99 different patents for types of hand keys between 1844 and 1900 alone, and no one knows how many others that never reached the U.S. Patent Office, the basic form as we know it now has remained the same.

The Spark period did little in improving the key, in fact all it did was produce some of the oddest types. These were very large instruments some with contacts a half inch across and weighing 18 pounds, to suit that particular type of operating. About the closest resemblance to the spark keys except, of course, that it is in miniature, is the Johnson "Speedex".

Our receivers are a far cry from either the old Registers or later Sounders, and certainly nothing like the early Wireless Coherers and Detectors. The transmitters have nothing in common, in appear with the "Rock Crushers" of the Spark Era. But any of the keys from 1844 (and there were none before then) up through today will do for operating our equipment.

Probably if Morse and Marconi would walk into a well equipped st a t i o n Marconi would be most interested in it all, but Morse might well stop at the RTTY and say "This is what I had in mind in the first place".

(OSCILLATOR & W3WRE)

PENSACOLA NEWS

By J. B. Hillard, K4SWQ

K4KIF now holds a general class ticket. Dave is already talking about tri-band beams, 75 meter doublets, and Collins S-line gear. Hi

The Pensacola Amateur Radio Club is moving to a new club house located at the Circle in West Pensacola. A room above Bob Prell's (K4-DDD) Circle TV Shop will be used. The move was made because of operating restrictions at the present location. They also have a new club call, W4UC.

As I have accepted a position with the U. S. Border Patrol in New Orleans, La., this will be my last article for Skip. The new job required my moving to the marsh lands. I have certainly enjoyed my association with Florida Skip and hope it's readers have found my articles informative and interesting. Editor, Andy Clark has been very cooperative in publishing all material I have sent him. For this, I say thanks. I will certainly miss living in the western section and being a part of the Florida AREC. Although contact with the Florida gang will be somewhat limited, I'll be keeping up with you boys via reading Skip. I urge all of you to continue your fine support of the AREC and Florida Skip.

ANNUAL FCC REPORT

The annual FCC report shows that 222,170 amateur stations were authorized as of June 30, 1961, a substantial increase for the year. Operator authorizations numbered 216,720, up 10,720 on the year. Over two million pieces of mail were received or dispatched at Washington, an increase of 330,000 for the year. FCC's report has this to say about amateurs:

"Public service is the keynote of Amateur Operators. A large part of disaster emergency and civil defense communications ser v i c e is performed through the Radio Amateurs Civil Emergency (RACES). In addition to peace time operation, RACES will function during wartime when other amateur activities must cease, so that amateur radio may continue to furnish essential public service communications."

(FEH-ARRL CLUB Bulletin).

THE NEW

Master - Crafters

AMATEUR RADIO

24 HOUR CLOCK

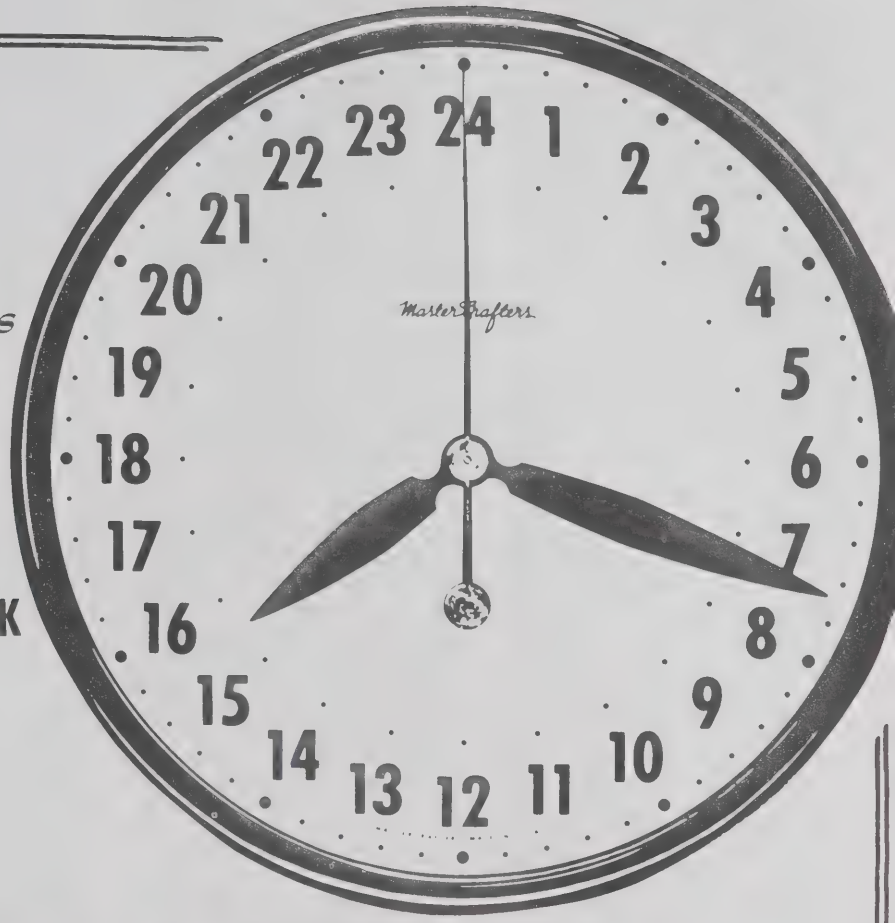

2324 INTERNATIONAL

The only true way to tell time without confusion. This 24 hour clock is an efficient, accurate wall clock. 12" white dial, black hands and numerals, red sweep second hand. 13½" case available in black or chrome. Dependable self starting U.L. Approved electric movement. Individually packed, weight 5 lbs. 6 to master, weight 32 lbs.

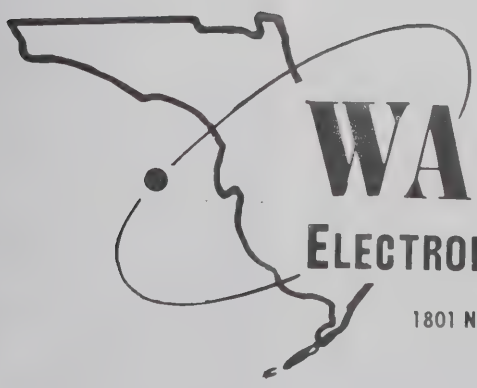

WALDER

ELECTRONIC DISTRIBUTORS

1801 N. E. 2nd AVE. MIAMI 32, FLORIDA

FRanklin 9-4794

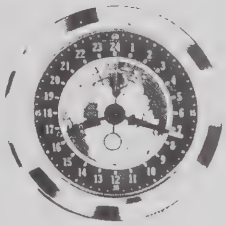

24 HOUR CLOCK

24 hr. chrome plated 8" metal wall clock. Inner dial with south polar projection map of world indicates time around world. Polar projection dial adjustable for various time zones. Shpg. wt. 2 lbs.

Amateur net $8.47
tax inc.

BEHIND THE GREEN KEYS

Don Wiggins, W4EHU

NET CHANGES . . . .

The Florida RTTY Emergency Net has been operating on a new time schedule for the past few weeks and has expanded its meetings to twice per week. The new times are: 9:30 pm EST on Monday and Friday and the new frequency is 3624 kc. Several factors prompteo the change. The original time on Sunday afternoon interferes with many RTTY'ers family activities and also the Florida RTTY Society carries on ragchews from time to time. The evening schedule has been working out very nicely as a net member can check in, determine in a few minutes whether any traffic is coming his way and then secure if desired. Or he can remain and help out with relays or join in the roundtable comments after completion of traffic!

The month of March was a banner one for the net. The traffic totals were 139 messages sent, received and relayed! Considering the limited meetings of the net, this is a lot of traffic! It certainly is a tribute to the efficiency and competance of the net members and also a graphic illustration of the practicality of RTTY. A warm note of thanks to all the fine RTTY-ers who participated!

A recent station checking into the net is W4DFU, the Gator Amateur Radio Club station at the University of Florida. Operators Jim, Rick, Cecil, Chuck and others have done a tremendous job in originating and taking traffic and have given the net a tremendous boost! Thanks, fellows, and keep up the good work but don't let your studies go . . . we don't want you to flunk out, hi! Other new and very welcome net members are: K4UGE John in Naples, K4EEQ Bob in Lake City, W4EAW Bob in East Point, Georgia, W4-ZDD/4 Charles in Naples, W4MXA Harold in Jacksonville, and W4UFQ Dale in Madison. Also, we have had checkins f r o m Mississippi, Louisiana, Tennessee a n d Michigan. Two meters has been a help in delivering net traffic in the central part of the state. For example, K8-HQW in Michigan called in one evening with a message for Ft. Pierce. Dick W4BOC in Atlanta reperforated the message, relayed to W4EHU in Orlando and I got W4MBR in Vero Beach on two meter phone (ugh) and the traffic was delivered . . . . real service! Dick, W4BOC has also been taking messages for Bubber Born, our ARRL director from some of the ARRL officials in Florida . . . delivery is real easy since Bubber lives on an adjoining lot!

If you haven't called into the F R E N yet, give it a try . . . we think you will get a kick out of it!

SOCIETY SUMMER MEET....

Roy Case, W4SSS, President of the Florida RTTY Society, Inc. has announced that the Society will hold a family-type meeting at the pier 66 Motel in Ft. Lauderdale on June 16-17, 1962. He has arranged for special rates at the motel and an extensive entertainment program including a boat cruise on the intercoastal waterway. An executive meeting for members will be held and other activities of interest to RTTY'ers are scheduled. Complete details and registration information may be obtained from Roy or from Fred, W4RWM Secretary, PO Box 6047, Daytona Beach.

TECHNICAL TIPS . . .

In our last column, we discussed a "bell break" system for RTTY operation. A number of fellows in the southeast have installed this simple gadget and it really makes fast breaks easy! It is very handy and useful for traffic handling, also. A simple device that complements bell break and adds a great deal to operating convenience is "narrow shift CW identification."

Since the FCC has denied the ARRL petition for elimination of dual-ID, identification will be with us a long time, in all probability. One of the nuisances of CW is that the other fellows printer will run "wild" when the carrier is keyed and usually switches must be flipped rapidly to prevent this. However, if the "mark" signal is keyed by means of FSK, but with about 25-50 cps shift instead of the usual 850 cps then the other fellows printer will remain quiet during CW ID. This is a distinct courtesy on the part of any RTTY'er as it eliminates the frantic switch-flipping on the part of the other station! We hope that this procedure will become universal . . .

To accomplish NS CW ID is very simple. Just insert your key in series with your keying leads going to the FSK circuit in your transmitter across the key, the center arm going to one side and one of the other terminals to the other side of the key. The exact value needed will depend on your FSK circuitbut about 10,000 ohms should be OK. Now tune in your "mark" signal from the VFO and adjust the pot so that the audio tone just noticeably changes when the key is operated. Ther reset your shift pot and you are ready to go!

An additional advantage of this scheme is that you never can inadvertantly leave your key open with the resultof "no carrier" as happens occasionally when using nirmal make-break CW keying!

NEW RTTY HANDBOOK . . .

We have received a copy of the new RTTY Handbook by Byron Kretzman, W2JTP and published by CQ Magazine. Byron has done a very fine job of collecting in one place a tremendous amount of valuable information about printers, tape gear, wiring diagrams of machines, nomenclatore and other data. He also explains the basic ideas of RTTY in a very lhcid fashion and gives a good rundown on operating techniques, station arrangements, etc. A limited amount of information is presented on converter design, most of which is taken from his column in CQ. This handbook should be on every RTTY ham's shelf. See a late CQ issue for more details.

FIGS UE Don, W4EHU

NIX ON HS

The U. S. government has been advised that Thailand, prefix HS, has never withdrawn its objection to international communications by its amateurs. Therefore, Thailand has been put back on the banned list published by FCC of countries objecting to communications between their amateurs and those of other countries.

In addition to Thailand, the banned list includes Cambodia, Indonesia, and Viet Nam. Accordingly, U. S. amateurs are prohibited from working stations with the prefixes HS, F18, PK, XU, XV, YB through YH, and 3W.

MODERN DESIGN

Every old timer can remember the days when amateur radio was largely a "do-it-yourself" hobby. Some pieces of equipment could be purchased ready made but practically any skilled amateur could turn out better gear at home, and there were almost as many different types of equipment in use as there were amateurs.

Those days are just about gone. With the ever increasing complexity of modern equipment, and particularly since the wide adoption of single sideband, the average amateur can no longer hope to produce at home the kind of gear he needs to compete in today's crowded ham bands. Even if he has the technical know-how (which many do have), the necessary tools and laboratory equipment are beyond the reach of all but a fortunate few.

The job of designing and producing today's amateur gear has become a cooperative effort requiring the most modern facilities and the best engineering talent available. At the large companies there are many engineers, a large percentage of them active amateurs engaged in trying out new ideas, developing circuits, and designing new gear. It would probably be a shock to most of us to find out how few of these promising ideas actually stand the test of laboratory investigation, development, and design. Even more shocking to learn how few ever finally appear as new models.

Truly, our hobby is changing. The kits available on the amateur market today are as close as some of us come to building our own equipment. They are a great asset, though, as they provide savings to those who have the time to spend building a rig, without requiring that every amateur be an Electrical Engineer. Amateurs do still experiment with their own circuits, and enjoy building some of the less modern equipment. This is true, at least in the way of transmitters. As for receivers, with the necessary selectivity and sensitivity, 99.-9% of our fraternity buy them as kits or units. We still have an opportunity to enjoy the fun of designing our "home-brew" equipment and certainly e v e r y amateur should try it.

(CARC-CARRIER)

FLORIDORA YL NEWS

By Ann Pitcher, K4RDX

As another successful year is ending for the Floridoras, and as they plan their trip to the Orlando Hamfest, where they will celebrate their fifth birthday and elect their new officers for 1962, they can look back with pride on several major accomplishments. Among these is the establishment of the Y L FINS, a 20 meter net sponsored by the Floridora Sidebanders, dedicated to the ideal of better friendship with and understanding of our sister Hams in DX-Land. Also, through trial and error and despite many frustrations, the Floridoras can proudly say they have solved the problem of operating mixed AM/SSB Nets harmoniously.

Each Floridora has brought her best to the organization this year, and again, the individual accomplishments of the Gals have been very high. Several Floridora Novice operators are now proud of their new Big Tickets. Many Floridoras have entered and won contests, and have earned their fair share of Certificates. Others have handled traffic, made BPL, played a major part in two and six meter operation, helped establish traffic Nets, operated in emergencies and emergency tests, and all have, admittedly, done their fair share of rag-chewing! Now when you hear the OMs sign QSOs with Floridoras with 88's, you'll know why!

Effective May 1, 1962, Marge Campbell, K4RNS, 24 Palmetto Drive, Ormond Beach, Florida, will be the Certificate Custodian for the Floridora Y L Certificate. W/K sstations work 10 Floridoas, others 5, and send 15c in stamps or coin to Marge for this very attractive Certificate.

Several Floridoras attended the recent Auction in Ft. Lauderdale and had a lovely time at the get together at Annette's, W4CWV, in the afternoon. Chris, K4NQD, from Thomasville, N. C., has been a most welcome addition to the Floridora SSB Net on Tuesday mornings. Marge, K4RNS, has just received a sticker for working 50 more YLs. Her total now is 550 confirmed YL contacts.

V. Mayree, K4ICA, is in Lake Hamilton for the month of April and operates from there as K5LXA. V. Mayree reports DX-OMs wait on the YL FINS frequency for two and three hours until the Net closes for Floridora contacts. Understand there may be plans to make these very fine fellows Honorary FINS! The Gals in all of 4, 5, and 6/Land were guests of the YL FINS April 12th. Few Nets have enjoyed such rapid growth or created such favorable comment. Keep up the good work V. Mayree!

Met, K4HSC, and family have just been featured in an article in the Coral Gables newspaper. Her son Jack, W4-OWX, spent four days with her in Coral Gables recently. Meg will be in Hiawassee, Georgia, for the season again this year, but plans are that Jack will fly her down to the Orlando Hamfest.

Joan, K4JZX, has been having a ball with the 2 meter rig she gave her OM, K4JZU, for Christmas. This must be FB with Rollin — he sent her red roses for her birthday again! Art and Ruth, W4FE/K4ANR, visited Rosalie, WA-4FJN, ex-K9KKG, in Sarasota and all in turn visited Dot, W4UF, in Englewood, where they all checked into the Sunday morning Business Gals Net!

The Campbells, K4RNR/K4-RNS, entertained Fred, W3-KTV and XYL, Helen, who were down from Pennsylvania for 2 weeks. Then, just when Marge was having a ball with her new Thunderbird beam, Flori/Daddy Jim, K4RNR, gave her the keys to a new silver gray Falcon!

Hope you didn't miss the very fine article about Shirley, W4WPD, which appeared in the Tampa News. Wonder how many worked the crossword puzzle in March QST, and didja' notice it was the brain child of Dot, W4UF! Hope to see more of them in the future, Dot! Dot has received her Certificate for working 100 CHCers and now has a total of 100 Certificates. FB, Dot!

Bernie, W4ZBA, who has just spent 3 months visiting his Floridora Mom, Ruth, W4-BWR, built an amplifier for her 32S-1, which employs three 813s in its final, and installed her beam with CDR Rotator on her tower. Ruth, also, gives a favorable report on the performance of her new 75S-3 receiver.

Arlie, W4HLF, and OM Roy, W4VPO, from Orange, Va., are mobling and visiting Hams in Florida on their vacation. They called on K4RNS K4RNR, went to the Ft. Lauderdale auction, and called on Fran, W4BIL and Shirley, W4WPD. Arlie has been DX Correspondent for YLRL and the Floridoras were very happy to see her and OM.

Nancy, K4ACF, is back on 6 meters and K4RCK, Jeri, in Ft. Lauderdale, has been heard operating with K4RNR K4RNS on 2 meters recently. FB! One of the most interesting contacts recently, was between Ellie, K4RHL, and Tom, W9GBH/MM. Tom was aboard the carrier U. S. S. Randolph and the time of the QSO was just one hour after Astronaut Glenn left the Randolph. Ellie has received a special QSL card from Tom and promises to let the Gals have a peek at it in Orlando.

The Floridoras happily welcome these seven new members, who bring the total membership to 109:

Margaret, W4KZT, whose former calls are D4AXD, W6-PXC, and KP4CV. Margaret enjoys contests, traffic, and sewing. Her OM is Whee, W4-LDM.

Nancy, WA4EDL, operates 6 meters with a 60 watt base station and 10 watts mobile. Nancy enjoys reading, music, and would like to see more activities on 6 meters. Her OM is Ned, K4CNB.

Silvia, WN4EED, (Earnest Eager Operator), can be found on 7.153, 7.167, and 7.-178 with a FB 60 watts. Silvia enjoys ragchews and needlework. Her OM is Tom, K4EWU.

Frances Adams, W4WJM; sponsored by Fran Adams, K4PPX, should have a merry 'ole time with QSOs and QS-Ls. They both live in Ft. Lauderdale and both operate 6 metes! OM of W4WJM is Ab, W4FNR.

Gretchen, W4UTL, uses the Ranger with HQ-110. She is a homemaker and a member of the Tampa Amateur Radio Club. Her OM is WA4DOX.

Camille, WN4DNV, enjoys ragchews, gardening, bowling, and crocheting. Camille has passed the Technicians exam and is awaiting her new call. Her OM is George, WA4CMR.

Marilyn, WA4EXD, operates 6 meters using the Gonset G-50 mobile 6er. She enjoys ragchews and meeting Hams. She is a homemaker and secretary. Her OM is Harold, W4UAV. A FB group of new Floridoras!

Many thanks to all for the lovely cards, letters and flowers while I was in the hospital. To the Floridoras who pitched in and gathered the news for me—BLESS YOU!

HAPPY BIRTHDAY: April 1 - K4JZK; 2 - W4UF; 12 - K4CXD; 13 - K4TBG; 19 - W4IUR; 21 - WN4DNV; 26 - K4RCQ; 29 - K4UIZ, K4-LWA.

May 2 - W4HYV; 6 - K4-YTC; 7 - K4HSC; 10 - KN4-ZXS; 13 - KN4NTP; 15 - W4GAN; 18 - WA4BMC; 19 - K4IRZ; 23 - WN4AFL; 28 - W4BGF; 30 - K4PBW.

FROM THE PRESS

(Miami News) In Chicago, Civil Defense officials disbanded an amateur radio group organized to provide emergency communications. The young men were broadcasting commercials and made dates with girl friends on the air. (Editors note: Now there's a bit of good amateur publicity, or could it possibley be the CBs?)

CALL "E. E." FIRST
EVERYTHING in ELECTRONICS!
Factory Distributors of:
• SWITCHES • RHEOSTATS • TUBES • CONNECTORS
• WIRE • RELAYS • CIRCUIT BREAKERS • INDICATOR LIGHTS
• CAPACITORS • RESISTORS • COAXIAL CABLES • LAMPS
Electronic Equipment Co. Inc.
AVIONIC DIVISION
2781 N. W. 42ND AVE., MIAMI, FLORIDA • NE 5-8421

PENSACOLA NEWS

J. B. Hillard, K4SWQ

W4IMY was voted "VHF Amateur of the Year" at the PVHFC. he received a very nice plaque which was appropriate for the occasion. SCM W4RKH made the presentation.

W4QK is operating a new Ranger II. K4RMO has moved to Atlanta, Ga.

WN4ELE now has tower up 50 feet. K4IYQ is back on the air at new QTH. W4BVU operating mobile on 6 meters. K4KIF and K4YVJ worked South Fla. on 2 meters.

New members in the Escambia County AREC are W4's LGC, RWY, VBU - K4's CFS, KHC, JDW - WA4's ALH, DRE, and W3HJU/4. This brings the total membership to 31.

K4FOG and K4EYI received letters of commendation from Cmdr. G. R. Berkeley, NAS executive office, Pensacola for the part played in getting some information from Guantanamo Bay, Cuba. The information was for a worried Navy wife whos husband had a critical heart attack in Cuba. Cmdr. Berkeley taking immediate short cuts contacted K4-FOG and EYI requesting contact with the Navel Hospital at Guantanamo via amateur radio. The NAS club station, W4NBF, was used for the first contact. K4EYI ran several phone patches during following days for the wife to the hospital in Cuba.

K4LQC from CN8 land was a recent visitor to Pensacola. Many of you will remember Hank when he lived here. One evening during his short stay, several local hams gathered at W4OOW's GTH for a gab fest. It was real interesting to hear Hank tell about the country over there. Also another point of interest, no amateur license are being issued to U. S. service men at present in Morocco.

WA4DRE is a new member of the Pensacola VHF Club.

W4SHW has received his DXCC and WAC. K4ZMV in Gulf Breeze now running a new Valiant.

R A F SPLATTER

Say OM, Lets finish this rag-chew on 10 meters, so we won't QRM the whole USA and Part of Europe . . . . that 5 0 0 w a t t s your running sounds like a couple KW!

—RAF

THE FLORIDA SIDEBANDERS

Big doing in the offering! The time: Orlando Hamfest; the date: 4 May 1962; the schedule: SSB Forum and Florida Sidebanders Assoc. meeting at 1600. SSB Dinner Saturday evening. How's that for activity? If you want to attend any of these affairs let Dave Hall W4TOD, of Orlando know your intentions.

Newly certificated members: No. 100 WA4DQE "GE"„ Ft. Myers; No. 101 K4TGN Alice, Jacksonville; No. 102, W4IAN, Ted, Jacksonville; No. 103 W4COZ, Wes, Lake Wales; No. 104 W2KNQ/4, Harry, Islamorada; No. 105 K4OMM Chuck, Melbourne; No. 106 K4GAF, Van, Tice; No. 107 K4BYI, Mac, Gainesville; No. 108 W4EXP, Ike, Orange Park; No. 109 W4IAD, Hy, Tampa; No. 110 W4FDA, Pres, Key West. Many congratulations to you all.

New calls hear on 3940: W4CPG, W4GEW, K4LFA, W4GPB, W4LQN, K4WEJ, K4ENW, and K4RKY.

Short of time this month due to having to make another trip to Norfolk for Uncle Sam. So that's the output of my balanced modulators for this month. See you at Orlando! READ FLORIDA SKIP. 73 Burt/W4CNZ.

DIETING

By Sandy K4DHD

Should you ever feel
  Inclined to try it,
Let me warn you against
  That slimming diet;

No pills can do it,
  Only starvation -
No foods that you like,
  The rest a slim ration.

In front of you, food
  'Nuff to feed a city
But not for you -
  And you'll get no pity!

While all about you
  Eat like mad,
Your stomach tells you
  Life is sad;

No sweets, no fats,
  And very few starches
To get your weight
  Off of your arches!

Your scales are wrong -
  This cannot be;
A week of misery and -
  You've GAINED two or three!

SOUTH MIAMI RADIO CLUB

Since the New Year the South Miami Radio Club has continued to progress with interesting meetings and projects.

The January 19th meeting had visitors Jerry Freeman, W5CME EX K4SXO and XYL Shirley W 5 D V V, together with guest Arcie Arceneaux K5XGJ with XYL K5SGK. Jerry is with the F.C.C. in New Orleans and was badgered at the end of the meeting with questions. He graciously gave the answers out of the "Horse's Mouth". Arcie invited everyone to the Delta Division Convention of the ARRL at New Orleans later in the spring.

At the February 2nd meeting new members W4RLO-Bob, K4RDR-Bob, WA4FFP-Bud and WA4BZB-Joe attended their first meeting as new members, together with visitors W4VBQ, WA4EAI and Jack Genova.

New members WA4BGL-Ira, WA4AII-Jim and WA4-CIK-Chuck are also busily installed in new working jobs with the Club.

Visiting at the February 16th meeting were W4KQS-John. W4ZQM-C. D., W4ZPP-H. B., WA4DWS WN4CVK-Joan and XYL of K4YSG-Alice, together with Jerry Monash.

K4ISH-Lloyd gave a very interesting talk on 1200 Mc emission.

The Club participated in the Engineers Fair at the University of Miami and had a very interesting and extensive exhibit of ham radio equipment in action. Many many messages were handled for the people visiting the Fair and an exhibit of QSL cards and the various awards were displayed.

ARRL movies are scheduled for future meetings as is a picnic in the spring.

K4YSG and XYL-A l i c e were double door prize winners.

73 W4RZN

PHONEY PHONETICS

We print these for fun. How about yours? SKIP Box 501, Miami Springs 66, Fla.

W4SKC — Silly Kissing Children
  Stu p i d Kilowat Caller
WN4CPL — Cotton Pickin' Lid
K5MYG — Mischevous Young Goats
W4SAT — Sitt i n g Around Talking
K4ISA — It Sounds Awfull
W4FSS — Facing Starvation Slowly

SUNCOAST VHF CLUB NEWS

The Suncoast VHF Club held its annual election of officers at the February meeting. Our new president is K4-EAC, Hilda; vice-president is W4APV, Jim; secretary/treasurer is WA4EEZ, Leslie; and the net manager is W4PMX, Andy.

A six-meter hidden transmittre hunt was held March 4, with nine licensed amateurs participating. The winner was K4PBP, Dick, with K4SHI, Roger, coming in second. Last, but not least, W4-NEO, Ed, came in for the "booby prize"! The location of the hidden transmitter was one which had everyone fooled! K4QOK, Bill, who was the "hidden one", was in his own shack, will all the comforts of home, hi! Bill had us all fooled because he was transmitting on his cubical quad, which he rotated every time he gave anyone a fix. Boy, what a sneaky deal to pull!

Two meter activity is on the upswing in the Suncoast area. K4PBP, Dick, is running 400 watts on two, and worked K4KIF in Pensacola on March 10. Dick is now holding weekly skeds with K4KIF, also K4DZP, Chauncy, in Hialeah. K4VGJ, Gerry, in Ellenton, heard a Texas station, W5FMV, on March 10, but he was unable to work him due to local QRM! Al, W4SDC, is running a "Super Seneca" now, using the power supply and modulator from his "Apache". He is using 4X150's in the final, instead of 6146's and is plate-modulating the rig at over 200 watts!

As always the Suncoast is enjoying the visits from our Northern friends, including Andy, K8ACC/4, who is running a Clegg Zeus on both six and two, and Chuck, K1-QDU/4, who runs a Gonset Communicator III.

Six meter activity continues to increase, with a new station being heard practically every day. There is also an ever-growing number of General coming up to six meters; Welcome one and all!

73, Leslie WA4EEZ

HAMS HINTS

Well, here we go again. Spring has sprung, things are starting to grow, and the old blood circulation is speeding up. (Who am I kidding at my age?) Anyway I'm glad Tip is back with us again with some real meaty writing. Hi Tip.

A few things I would like to comment on though If I may. Like Florida Skip being partisan to ARRL. If that were entirely true it still wouldn't be surprising. After all, the League is made up of hams, it serves the amateur whether he be a member or not, and it does go to bat for us. When you come right down to it do you know of any other group or groups that is interested in keeping you around as a ham? Seems to me that Florida Skip could do a lot worse than supporting ARRL and its' policies which are, incidently, your polices — if you are a League member, that is.

I believe that all hams are aware that ARRL doesn't mind in the least that some, perhaps many, disagree with them. they prove that by publishing letters in almost every issue from people on both sides of the fence giving both criticism and praise just like other magazines do. Seems like a pretty general editorial policy. Incidently I suppose that you all know that League members are in the position to completely direct policy adoption by the League. You didn't Better get your copy of the Articles and By-Laws that Tip advised you to get by simply asking for it from Headquarters. If, after reading it, you aren't firmly convinced that YOU as members run this outfit the durn thing is printed in the wrong language.

Who do you tell your gripes (about policy, that is) to - Joe over in the next county, or do you write to your Division Director about it and get all the friends you can Coerce into agreeing with you to do the same. The Director is bound to follow your lead and support your wishes at the various appropriate board meetings. He is your representative but, by George, if you don't tell him what you want, in a loud enough voice, he will just have to draw his own conclusions and act in the way he thinks is best.

So please, don't anybody tell me you can't do anything about what's griping you from time to time. One more thing. If you dont like what this feller is doing - or not do-ing - for you, the next time elections come around, cast your vote for a change. It's your perogative, your right as a League member, so why not use it. You know one good way for all these non-members who disagree with things about the League, can take care of this very neatly, is to become a member and thus be eligible to take part in its' government and the formation of its' policies. Don't know how it can be done though when it's tough just trying to get out a decent vote from our own members.

About that article that I wrote Heck, the only cooperation that the Editor gave me was to publish it - and he does as much for everyone - impartially, provided they watch their Ps and Qs and especially their language. I don't need anyones help to write my thoughts - only the strength of my convictions - and I have that - honestly. Reference my concept of League operations. Strictly from the book reflecting only ARRL policy the best way that I know how and my moods have nothing to do with it. Good grief, every ham can read, most have manuals and can readily see when and if I get out of line and I know that all are ready to set me straight, hi.

About traffic. It is AN important part of public service and it does strengthen our position with the FCC mainly because it is an activity that is REPORTABLE to the League and thus finds its' way TO the FCC. It is not however the only nor the most important method of providing public service nor is it the only means of strengthening our position.

In my opinion AREC operations takes first honors. I would place traffic after this. This does not mean that other amateur activities are ignored as I have pointed out repeatedly but particularly in a recent column where, I believe, I actually itemized each activity and pointed out how each one contributed directly or indirectly to public service and thus supported amateur radio. The point that I HAVE been trying to get across is "if it is reportable to ARRL, thus reaching FCC, is contributes DIRECTLY to the support of our position and the reaction is faster and more effective". I have said this many many times both in writing and at the many clubs that I have been fortunate enough to visit. Wonder why it doesn't sink in. It's really quite elementary.

Now for the posies and I really mean it. The rest of the column is beautiful. I agree with every point made and double it in spades, and it couldn't have been better put. With all the increase in activity on our bands it stands to reason that we could do without the multitude of over-modulated AND over-powered - yes over-powered signals heard these days. Maybe many have forgotten but the FCC does specify that no more power than necessary will be used in effecting communication. Zero-beating I believe is mostly a point of carelessness, something done in a hurry, or perhaps trying to zero beat by watching the S meter and not using the BFO or maybe relying on the calibration of the transmitter because the rig has no provision for keeping the receiver live while zeroing in. Oh well, I suppose that all one can do is preach, preach and preach.

Before I quit here and start copying traffic (is this a dirty word or something?) thanks again to TIPS TIPS. I REALLY DO enjoy reading it.

73 HAM K4SJH SCM E. FLA.

NEW POSTAL REGULATIONS

Important postal changes in handling third-class mail (SKIP) matter are now in effect. We need direct advice from you at such time as there's ANY change in your mailing address. Since we shall no longer get back undeliverable 3rd class mail, only YOU can keep it coming by a notice to: Betty Clark W4GGQ, Florida SKIP, BOX 501, Miami Springs 66, Florida. Note that 4 week's notice is required to effect change of address. When notifying, please give the OLD as well as the NEW address. To anticipate or be prompt in notification about a change helps YOU, the postal servic and us. Thanks!

SUNCOAST VHF CLUB NEWS

A six-meter hidden transmitter hunt was held March 8, with 18 amateurs "hunting". W4NEO, Ed, was the hidden transmitter, and he did a remarkable job of thoroughly confusing everybody! During the course of events, his antenna managed to blow down twice, resulting in varied signal strength reports. K4QOK, Bill, came in 1st, K4DII, Fred, 2nd, and K4LYS, Jim, straggled in last; A picnic was held after the hunt. Too bad the gas war ended a few days before the hunt, because we sure did burn up the gas, hi!

Cathy, W4BAV, has been quite ill, but is much better and is finally back on the air. We all sure missed you, gal! Also, W4PMX's XYL is in the hospital.

Dick, K4PBP, worked into Mobile, Ala. on March 12, on two meters. There will be a two meter net starting up on April 22nd, and K4PBP will be the NCS for awhile. The frequency is tentatively set as 145.350mc. Everyone is urged to join in this net, and make it a success.

The club has voted to request the FCC to change the club call, which is W4WVO, to K4JIZ, in memoriam to the late John S. Hall, who was a greatly respected member of our club.

The new TVI committee for the Suncoast V H F Club should be very good, since K4QOK, Bill who is the chairman, works in a TV repair shop! Incidentally, Bill's bossman is WN4FBV, Don.

73, Leslie, WA4EEZ

BEREAVEMENT

Mr. Carl Paulus, K4RKV, (blind) of 647 East 8th St., Hialeah, Florida wishes to thank all radio amateurs and friends who was so kind and thoughtful during the bereavement of his wife.

Many local clubs and nets came to Carl's aid when they were most needed. He said "everyone was so kind, I only wish there was something I could do in return." He also said "my neighbors are also very helping with the cooking and even reading me the news in SKIP."

Look for Carl on 6 meters.

SILENT KEY

(SPECIAL REPORT)

The radio amateur world was shocked June 30th 1961 to hear of the death of Dr. Lee De Forest, that grand old man of radio, called by many the "Father of Radio". We all mourn his passing. Reams have been written on his accomplishments, but very little has been written about this most humble of experimenters as he prefered to be called.

I first met Lee De Forest shortly after World War II in Los Angeles where he conducted a Radio Laboratory on Wilshire Boulevard. F e w would believe that this great man of wealth to humanity would live out his full life in a thread-bare rug lab, much less the thread-bare elbows of his English woven coat. I found in Lee, a very humble man. A man close to the heart of every amateur, for he loved the Amateur. Lee was Radio Amateur No. 1 when all radio was amateur radio.

A few years ago, I heard he was seriously ill and in the hospital. The simplest thing I could do was drop him a "get well" card, and much to my surprize, sometime later received this simple note, "8190 Hollywood Boulevard, My Dear Friend, Your good wishes have done much in speeding my recovery. Lee De Forest." Written in a slightly unsteady hand, but truly a great man, for who am I, but a ham.

We in Florida feel close to Lee De Forest for it is said that he built the first Naval Radio Station in Key West, "NAR" in 1911. We well remember the 35 KW arc transmitter, with it's 35 amps of RF going up to three 425 foot high towers. We remember the Tank Inductance, so big it was hoisted up in the rafters of the tall ceiling of the power house, as the station was called. We straddled that very arc, and struck it, in preparation of the evening 10 PM Hyrdographic Reports to ships at sea on 1200 meters, I think. Many an amateur learned to copy code on that signal, including myself. In 1927 the Navy retired the old arc, her back-shunt wave was crippling communications all over the world. De Forest's old towers still tand and few today realize the history they have made in Naval circles.

Lee De Forest, most famous for his invention of the three-element Audion, as he called it, was born in Council Bluffs, Iowa on August 26, 1873. His father, Henry Swift De Forest was a Congregational Minister and later became president of Talladega College in Alabama. His mother was the daughter of Rev. Sheldon B. Robbins, a member of the missionary that founded Muscatine, Iowa. It was only natural that the family wanted him to follow the ministry, but Lee had a flair for inventing and persuaded his father to let him go to a scientific school. Since his dad attended Yale (class of 1857), Lee had the urge to prepare for the Sheffield Scientific School at Old Eli.

At Yale young De Forest heard Professor Henry Bumstead lecture on electromagnetic waves and watched him demonstrate the Hertz experiments. They made a deep impression. From studies by Sir William Crookes on "Some Possibilities in Electricity", which stated, "What remains to be discovered is-first, a simpler and more certain means of generating electric waves of any desired length-second, more delicate receivers-third, means of darting the sheafs of rays in any desired direction."

De Forest began to think about this problem. Tesla's book on electrical phenomena inspired him; he went to New York and talked with Tesla. "Wireless Telephoning" became his goal.

Leaving New Haven in 1899, he went to Chicago to work for the Western Electric Company in the dynamo department for $8. a week. Dynamos held little interest, he knew the weakest link in the wireless circuit was the coherer. From Tesla's account of an electric arc in the flame of gas light and of the possibilities of using it as a source of oscillating current, he was intrigued, could it be used in wirless telephony, The idea of a hot gas or flame detector fascinated him, but it proved to be far from practical.

As a step in another direction, he developed a self-restoring coherer and called it a "Sponder", or "electrolytic anti-coherer." Confident that he had something new he left immediately for New York, where Abraham White helped him organize the De Forest Wireless Telegraph Company in 1902.

Still looking for a better detector, he recalled "the Edison Effect" which he had learned about at Yale; Fleming had just discovered a strange phenomina, i.e. an electrical current flowed from a hot filament to a cold plate in one direction only, but it would not amplify. De Forest added the "B" battery between plate and filament and showed slight improvement as a detector, but not good enough. It was not until 1906 that he added a "trigger", a zig-zag piece of pltinum wire-between the plate and the filament. He called it the grid. With the plate battery still in the circuit, and the filament lighted, the result was the three element thermionic vacuum tube, agenerator of Hertzian waves, as well as a detector and amplifier of them. Clifford Babcock, Lee's assistant, named it the Audion" and was responsible for most of the glass blowing.

The De Forest Aladdin lamp of electronics revolutionized wireless, and practically made it obsolete. Spark, with it's damped-wave train, was doomed. Now, continous-waves were possible that could be controlled. The audion was classed as one of the twenty great inventions of all times. It is quite possible, today, to rank even higher.

Even De Forest did not realize the magnitude of his invention at the time. He continued to work with the arc transmitter. In 1910 he set up the first broadcast station using the Arc with a magnetic flame deflector for voice modulation. This was in the Metropolitan Opera House. The first concert was an opera aria sung by Caruso. This broadcast was on January 13 1910 and must have been on a wavelength of 1200 meters or more, as the arc was very inefficient below this.

De Forest convinced the Navy on the value of the Arc and shortly after went to work on the station at Key West, competing it in 1911. The audion was becoming popular as a detector and amplifier with the big commercial interests, but were very expensive and had very short life-span. Amateurs could only borrw "rejects" from certain sources on the "QT". Those with soft vacuum (and most were) could only be used as detectors.

Finally in 1914, with war immenant, and new strides in vacuum processing, a realy hard vacuum tube was built. The first pratical oscillator tube was now available. Western Electric used them for "repeaters" in telephone service. They were rugged, and just as hard to get. De Forest now made his tube available in the largest cities for the amateur. Due to the shortage of supply it was only possible to obtain them built into someone elses cabinet and circuit. The Mignon Wireless Corporation in Elmira N. Y. marketed this unit in 1915, as did the Wirless Mfg. Company, Canton, Ohio, and others, including one company in New Jersey who guaranteed his unit for 3 years and stated "With fair treatment it ought to last one hundred years". Well they didn't. De Forest had a lot of trouble with them. Carbon filaments were very fragile and short lived. He started putting two filaments in each tube for insurance of satisfied customers, but even then filament burn-out was of great concern and this writer believes that had De Forest licked this one problem, most all tubes today would be imprinted with the "De Forest" trade mark.

For his work in wireless, he was the recipient of a gold medal in 1904 at the St. Louis Exhibition; the Elliott Cresson Medal of the Franklin Institude in 1915 for discovery of the audion; and a gold medal at the Panama Pacific Exhibition in San Francisco in 1915. Added to his many honors was the presidency of the IRE in 1930 and for many years Honorary President of the Veteran Wireless Operators Association.

A Friend

40 YEARS AGO

Things were really hopping in Ham Radio. Two of our Florida Boys was heading the league; Charlie Service, 3ZA, now W4ie, was Vice President and Fred Schnell, 1MO, now W4CF, was Traffic manager. Of course there was our beloved President Maxim, and our secretary Warner, both gone to their reward. Last but not not least, our Treasurer, Hebert, who has made many friends in Florida these many **years.**

It is just such a day as today, August 1921, and you are there. DX is 1000 miles and few could brag of more. Spark and CW are in the twelvth round - neither has been down to the count of ten. The score is about even, but mostly because there are more sparks. The newcomers are mostly CW, so what they say don't count for much. The big issue of the day is "Can CW win out". The thrill of pounding the other with a whirling, roaring, ear splitting spark to the tune of 1 KW, or even a 1/4 KW, evidently was enough to make the spark boys feel they were ahead. Few real amateur stations could boast of more than 10 or 20 watts (five watts per tube). We had tried and failed, in February of this year, to put a mere signal across the pond, to England. So now we are making plans for another test; a big one this time, maybe one or two with a thousand watts of CW!

The dates are set for December 8th to 17th; but first there must be preliminary tests from November 7th to 12th. Those who qualify in working 1000 miles or more will be allowed to participate in the big Transatlantic Sending Tests. Next month is the big "sign-up" date for the **preliminaries.**

Schnell is quoted as saying "CW is here to stay and unless we are afflicted with a foggy brain, CW will be so far ahead of spark that messages of unimportance will be left for that means of communication, while messages of more importance will go via CW, beacause they will get **through."**

Tubes are getting more plentiful. UV-200 (soft detector) selling at $5 a throw. UV-201 (hard amplifier), $6. 50, while the UV-202 Five watter is now $8. The UV-203 Fifty Watter, with a plate no larger than the five watter is new at $30. The biggest bottle available is the UV-204 rated at 1/4 KW and is selling for $110. (Equivalent to about 6 weeks work).

There are a few Genuine handmade two filament Audiotrons available at $6. post paid, but a lot of these are "boot-leg" since they do not bear the true De Forest Audion signature. Moorhead valves and A-P "relays", both good tubes are selling on the West Coast. Oh yes! and Cunningham is pedalling the new C-300 with brass and ceramic base, made by Audiotron Mfg Company, who have been making tubes since 1915. The DeForest "Singer" tube rated at 37½ watts is available at $24.

The new Z-NITH Multiceiver is now available, 180 to 1200 meters, made by Matty Mathews, 9ZN of the Chicago Radio Laboratory (Now Zenith Corp). The Grebe CR-8 Short-wave Regenerative receiver, 150 to 1,000 meters makes it's appearance, while DeFores is trying to sell the "Interpanel" idea with his new "Radiophone", a four panel station, all in one wood cabinet, four panels in a row. A phone transmitter, range 30 miles, short-wave tuner, 150 to 600 meters, and Audion detector, and a one step amplifier. Colin B. Kennedy is making the neatest two-stage amplifier you ever saw for $55. Tuska's making dials now, after getting QST started. And by the way, do you want some back copies of QST? Oct. '16, May, June, July, Aug '17, June, July '19, April, May, June, July, Aug., Sept., Oct., Nov., Dec., '20, Jan, Feb, Mar, April '21, all 20 issues for $2. post Paid (Woww! don't guess they have any left now-the postage would be more than this!)

General Radio is making a darn good little Hot Wire Ammeter for $7.75 (Still have one, guess I'll hang onto it a little longer). ESCO, bless their little pea-pickin heart. offer you their new 2000v Motor-Generator set. Y o u must have one, everybody else uses them on CW (350v to 1000v). This one is guaranteed to burn out any tube made today (1921).

Well, there you are, gang, forty years ago today. See you later, maybe next month, if this gets by the Editors desk. 73 es 30.

The Old Timer

HOVERCRAFT

Fred - K4UGC

Joes' soda shop was situated at a popularspot on the bay with a clear view of the water. One early morning Joe heard a "beep" "beep". He set his cool drink down and went down to the boat dock steps to see what it was. He could hear it louder but didn't see anything until he looked down on the water. There was a saucer shaped object on the water putting out "beeps."

Joe figured it drifted there so he took an oar and reached out to "it" and as he touched "it" he heard a voice say "do you have any cool drinks sir." Joe dropped his oar and was about to run, when the thing said "look in the wire box there is some money for the drinks." with that Joe thought is must be a customer even tho' he couldn't see them. Joe muttered they must be far from home. Then Joe put some cool drinks and ice in the wire box on top of "it" and stepped back from the dock expecting it to zoom to outer space or something instead he heard the voice again say "don't forget the change and push the green button so I can get going." Joe pushed the green starter button and the thing lifted about six inches from the water and glided out towards the deep water.

Thats when Joe noticed how it floated, there was a large tire inner tube about six feet in diameter and about a foot thick at the outer rim. It was now clear water. Joe said "no rudder, no bow, no stern, not even a wake in the water. "It went directly to a boat anchored about two miles out in the bay. "It" sailed right over a couple of dry sand bars, went between two cannel marker poles. Joe grabbed his telescope and watched for the collection, but "it" circled half way around the boat to the boat ladder and landed on the water without a splash.

Joe watched them reach for the cool drinks and recognized them as customers, Phil and Jerry the local hams. They had used an old lawn mower engine and a radio receiver with remote control by shifting the battery as a pendlilum "it" be controlled in any direction except up. "It's" up maxium was six inches. The speaker made a good loud hailer in case of boat trouble "it" could glide up to a boat and shout "Ship ahoy" (follow me) could be painted on it.

When the chief life guard heard about the "thing" he asked the hams if they would help him at the big yearly picnic on the beach July 4th. They said they would be there. They knew the life guards would be to busy to watch everyone so they got some rope and attached to the "thing" and became assistant life guards with the "life saver" as they had painted on the side of "it."

WESTERN FLORIDA NEWS

Frank M. Butler, Jr., W4RKH

The Milton tornado provided another opportunity for service by Florida AREC members. Experience gained in Crestview was put to good use. About 150 operators worked for 30 hours and handled over 500 messages. K4-HOX did outstanding job in Milton. Perry: W4KQP hearing lot of DX on new reveiver.
Gulf Breeze: K4ZMV back on air with a Valiant.

Tallahassee: WA4AZR is mobile on 10m. WN4DNY has advanced to Conditional Class. Panama City: WA4FIJ is new NCS for WFPN on Sundays. K4WNA won first place in Science Fair. W4IJQ is now Asst. EC. PCARC working on 2m halos and Big Wheel antennas for CD. WA9BRL/4 is new Technician. WA4FJF was elected Secretary of PCARC.

Ft. Walton: W4ZWD received RN5 certificate for CW traffic activity. A state-wide roster of 2m stations has been prepared; a more complete one will be out shortly. W4-MTD was elected President of EARS. W4ZGS, W4CSS and W4PLK hunting DX on 2m.

Pensacola: VHF Club prepared roster of VHF hams in the area. Amateur radio was featured at USO Hobby Fair. PARC meetings have been moved to room over K4-DDD's TV shop. New club call is W4UC, a memorial to formember member. K4SWQ has been transfered, leaving a big job as EC to be filled.

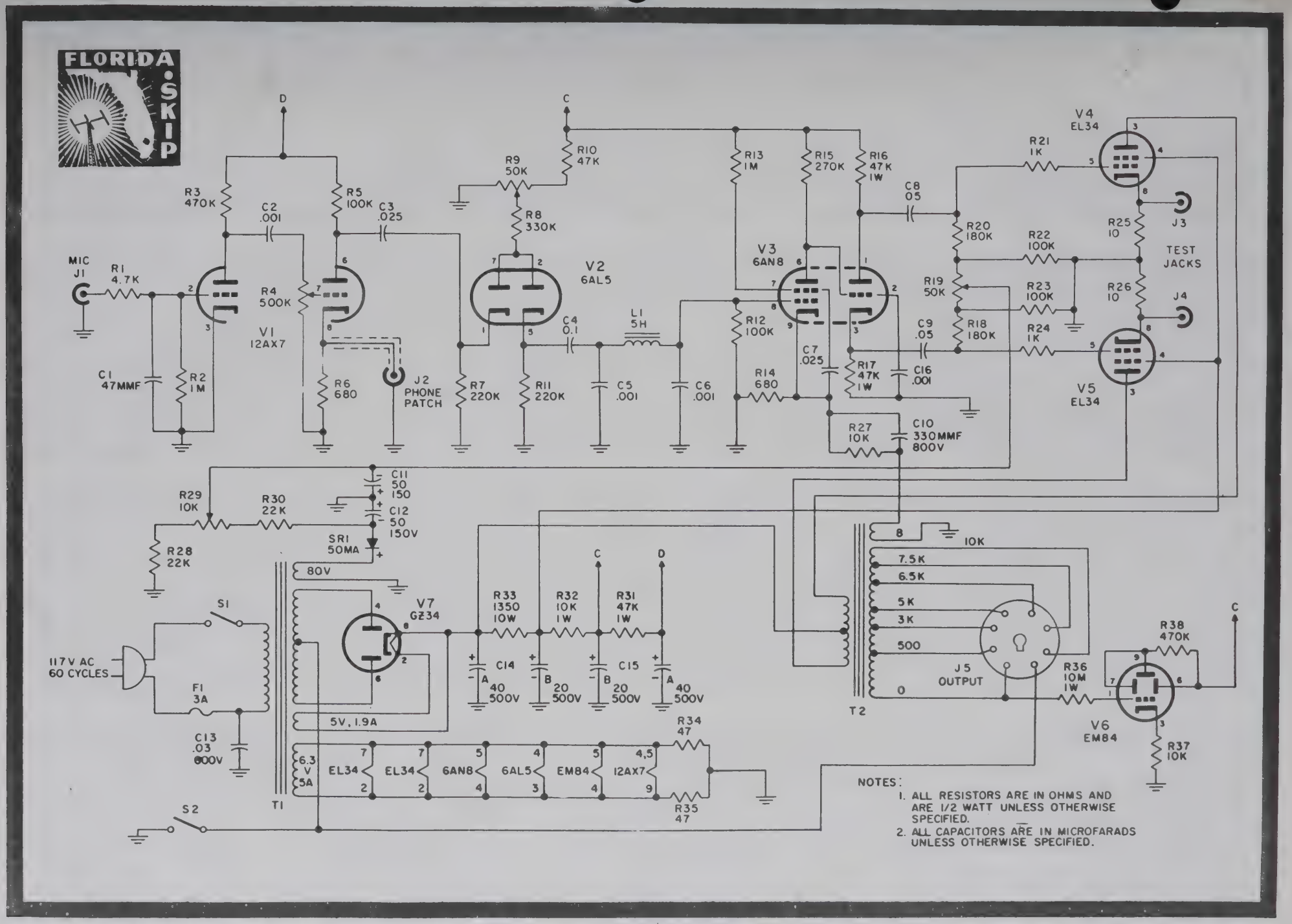

SCHEMATIC DIAGRAM FOR EICO MODEL 730 HIGH-LEVEL UNIVERSAL MODULATOR-DRIVER

SCMS CORNER

This column will be made up of bits of information and comments for want of any major issue to dwell upon at this time. If you have any ideas about what you would like to see here in future issues please drop me a line and I will do my best to oblige and will appreciate it as well.

FOR T R A F F ICKERS: When making out your report please remember that normally you cannot possibly list more messages relayed and delivered than you have received. I am still receiving an abnormally large number of late reports mainly due to loss of memory on the part of the reporters, hi. Suggest the string on finger bit?

FOR EMERGENCY NET MANAGERS: Would be a nice thing if I had available a complete listing w h i c h shows the name of the net, times and dates of operation, freguency, mode, net managers name, call and address, and average number of check-ins per session. This includes all amateur frequencies and all modes of operation. You might mention if mobiles participate and about how many and a brief description of what you are doing to prepare for THE day. You would be surprised at the number of inquiries that I receive almost daily that must go unanswered for lack of information.

FOR RADIO CLUBS: I maintain information folders for radio clubs, societies, etc. in this office which come in mighty handy at frequent intervals in replying to querries from not only all over the state of Florida but often from other states, frequently from those who are going to either vacation here or make their address permanent in our beautiful state. The information contained in the majority of these folders is however sadly lacking. Could you perhaps do something to make this folder on your club contain information useful to anyone who might request data. Use your judgement on what you would like to keep on hand in this office. The place, dates and times of your regular meetings would be very useful and is the question most frequently asked. Also many wonder if mobile monitoring is provided and what frequencies, etc.

D U R N E D INTERFERENCE: What's the matter fellers? is that old Ham spirit of consideration for the other feller, the feeling that being a gentleman isn't confined to eye-ball contacts. Suggest that a large-type copy of "The Amateurs Code" be posted in a prominent place in every 'shack' as a reminder. How about keeping that criticism, either of gear or operator, constructive, polite and in a friendly vein, as behooves the radio amateur. Take a listen to the European ham and learn how it is done. They are so polite that sometimes it even seems a bit sticky - but, by George, it sounds good.

POLITICS: Are you thinking about who you would like to see nominated for the next elections to be held in this section an division? Do you know what to do about it? Are you prepared to find out some facts about those who will be listed as nominees? Will you discuss the relative merits of those who will be in the "drivers seat" as a result of YOUR choice? Will you know or care enough about the candidates to find out their thoughts on current issues so that when you receive those ballots you WILL indicate your choice and you WILL return said ballot to headquarters to be counted? In short-will YOU be a REAL ARRL member? If you have not ordered your copy of the Articles and By-Laws of ARRL you are URGED to do so-right away. Read them well and know what cooks - before you have the chance to "burn up"up.

SHORT - ON ME: Engaged in (a) traffic; (b) DX; (c) contests; (d) emergency nets; (e) VHF 6, 2 and ???; (f) RTTY; (g) SSB; (h) AM; (i) CW; ad infinitum. My station: (1) Decent power AM, CW SSB, RTTY, LO & VHF etc etc. Rediculous for one man - even SCM, isn't it.

Ham K4SJH SCM

S. M. R. C.

For some reason or other the South Miami Radio Club missed giving reports to Florida SKIP on our last two meetings, so we will try and make up with this one report.

The meeting of March the 16th, the Club was host to Rolin K. Sloan, representative of the G. E. Industrial Tube division and operating out of Orlando. He brought with him their film called, "The Teacher Wore White", which showed the manufacturing processes and the design development of the G. E. reveiving tubes, both for industrial and entertainment uses.

This film was very instructive, entertaining and was well received by the members of the Club, which there were about forty including guests present. After the showing of the film and Mr. Sloan brought the bunch of very fine business enterprises with him, consisting of G. E. transistor manuals, G. E. tube manuals, and a half dozen of the new compactron tubes together with their bases.

Of course, the members were very happy with this array of door prizes and a great deal of fun was had pulling out the happy winners.

At the conclusion of the door prize distribution most of the members that could, went around the corner to the nearest coffee shop and indulged in a little eyeball Q.S. O.ing. We hope that Mr. Sloan will again honor us with a talk and another film some time within the near future. He was very interesting and he spent considerable time in answering questions put forth by the members of the Club and their guests.

The remark of the evening was made by Mr. Sloan when he said, "I have given these talks to many, many groups, but it is with fear and trepidation that I approach a group of hams, as you never know what kind of questions that they will throw at you for an answer."

We are very grateful for the time and effort put on our behalf by Mr. Sloan.

Our next meeting occured on April 6th, and it was again held in the court room of the City of Coral Gables in their municipal building on Aragon. At this meeting we discussed the club picnic, which will be held on April 15th on Crandon Park at which time we hope to have a very, very fine turn out. From the display of hands of those coming it looked like it will be a huge success. We also had a film at this meeting, one obtained from ARRL which was an instruction film regarding the triod and how it works and its application. Although this film was rather basic in its approach to the triod, nonetheless there were many who were very happy to have seen this again to refresh their memory as to its operation and its applications. We are finding that these films are very instructive and very helpful in running the meeting, and that the club members are enjoying them.

We were very happy to have four members of the Hialeah Radio Club as our guests at this meeting, and we hope that other clubs in the area will take advantage of our hospitality and drop in for meetings at any time. Our meetings are always held on the first and third Mondays of each month, and we extend a cordial invitation to the member of any club in the area and his guests.

May your VFO's remain rock stable, 73, TAWOLIK.

Electronic Maintenance & Supply

307 N.W. 27th Avenue Miami, Fla. Phone NE 5-2912

LOOK AT THESE GOODIES !

GELOSO VFO Cal 80M to 10M, brand new	**$29.95**
TRANSFORMER, Fil, 115v 60c, 24, 1 amp	**1.39**
4x150A, Guaranteed	**5.00**
5-125B, Guaranteed	**10.00**
813, Guaranteed	**6.75**

We repair all Ham Gear

Professional Receiver Alignment

NEW RTTY SCHEDULE

We have been advised by Don Wiggins W4EHU, RM-RTTY, Eastern Florida, that the Florida Radioteletype Emergency Net (FAEN) has been changed to the following: Monday and Friday at 9:30 pm EST on 3624kc. Official AIRL bulletin transmissions are made from W4EHU on Sunday at noon on 7135kc and Monday, Tuesday, Thursday and Friday at 11 p.m. EST on 3624kc.

In checking into FREN all stations are urged to have some traffic when possible, and to monitor until end of roll call in case there may be traffic going your way.

The purpose of FREN is to provide a network capable of supplying rapid and accurate communications to the Florida AREC disaster plan in case of any type of emergency. To this end, the regularly scheduled drills are to provide a means of maintaining a group of RTTY stations willing and able to assist should the need arise. The drills should provide practice in sending, receiving and relaying messages. Opportunity should be provided to experiment with better procedures and techinques such as rapid break-in, automatic calling (see March Skip) and similar work. It should also serve as a medium for passing of information to new net members or prospective members in efficient operation of their RTTY stations; thus all can profit from the experiences of others.

The original FREN schedule of 2 pm each Sunday on 7135kc has served its purpose of contacting and organizing a large number of serious RTTY stations in the Southeast. The Florida ARRL Officials greatly appreciate the time, effort and cooperation of all net participants. However, the Sunday afternoon time creates conflicts with normal activities, the Florida RTTY Society Sunday ragchews and now the Third Army MARS RATT Net. Also, the changing propagation conditions have caused SKIP problems in the late afternoon. For these reasons a new net schedule will be tried on an experimental basis. After a trial period, modifications can be made. We solicit your suggestions. 73 W4EHU

BROWARD COUNTY 2 METER NEWS

By Waldo Kurtz WN4BYQ

On Tuesday, February 13th the Net staged a very successful "Arm-Chair" Transmitter hunt. K4YBL - Jake - went mobile on two, located himself in an unknown position and made a five minute transmission. Net roll-call was made and each participant gave a direction signal strength report which was repeated by Net Control - Bill - K4RCV and was then plotted by the other members. Surprisingly enough, most of the "guesstimates" were very close with W4CWY - Con - pinpointing the location within feet! Even K4RNG - Les - from Miami was only about 8 blocks off. He should get a new corncob pipe for that performance!

Glad to hear June - WN4-BSH - is back on the air after a bout with hepatitis.

"Doc" - K4SJP is struggling with his Ranger and new capacitor checker. Hurry up. Doc, get on the air more often.

Want to hear JerI - K4RCX - on the air soon with that Keyer Santa Claus brought.

Slim - WA4AZZ - and "A" in that call sign tells that story, as well as for Win - WA4COR - too. Congratulations Y'all.

Busiest man in the net now is Jerry, - WA4BAJ - recovered from another outburst of phlebitis which kept him off the air for awhile, Glad to see him charging around again.

K4RCV - Bill originated and passed to Ham - K4SJH - and Waldo - WN4BYQ - a total of 79 pieces of traffic at the "Hi-Neighbor" Day staged at Hallandale on Sunday, March 4th. How about the other 21 pieces for B.P.L., Bill?

It sure would be nice if somebody could clear up the noise around Old Dixie in Hollywood so "Al" - W4GGF - could get on the air more often. That goes for a lot more locations, too. Our normal noise level sits around "S7".

Jay - W4VTJ - observing self-imposed quiet hours to prove that is wasn't all his fault. In line with this-While K4BZ's six and two meter beams were being adjusted and before the transmission lines had been connected, a neighbor came tearing out of his house to inform Al that his TV picture had gone completely white and would Al please stop it! Hoo Boy'.

Going to have to send a picture to "Skip" for publication, if possible, of K4BZ - Al - at the Hamboree-"Wheel Chair Mobile", no less and having the time of his life. Any of you got any troubles?

Many thanks to Fran -K4-PPX - and Arch - K4QQE - for the pointers on writing this column. Next month we'll pull WN4BYP out of the shack and let him write it. 73, Everybody.

ST. PETERSBURG AMATEUR RADIO CLUB NEWS

By Al Friend, WA4BGW

The St. Pete ARC held officer elections for 1962 at the first meeting in December, 1961. Bert Daisey, W1MRG/4 was elected president. Al Friend, WA4BGW was elected vice-president, and Ken Goodwin, W4VLH was elected secretary and treasurer for 1962. The installation banquet was held the first Friday in January and was a big success and was enjoyed by all. The club finished 1961 with only a slight capital gain, but a large increase in interest and membership over the preceeding year.

Naomi Spence, W4TDK is conducting her annual advanced code class, and Jim Dillman, K4USK and Al, WA4-BGW are just starting a novice code class to enable people to get their Novice license.

SPARC certificates issued recently went to: No. 28 K4-ZVL, Walt; No. 29 W4VLH, Ken; No. 30 K4RUZ, Frank; No. 31 K4WVX, Jim; and No. 32 WN4BGU, Bill. Congratulations fellows.

Jack, W4NOX is going sideband with a new SX-115. Joe W4JE is well along on building his all transistor receiver. Dick, W4KCG has now gone mobile in his new car. Jack, WA4BOW, now on six meters, is having a real ball. Everyone here has been enjoying the band openings on six. Ken, W4VLH and Al, WA4-BGW have been doing homework on 29 Mc.

Well, I guess that's all for this month. Be seeing you all soon.

73, Al Friend, WA4BGW

NEXT EDITION OF DIRECTORY

The next edition of the Amateur Radio Operators Telephone Directory will be ready about December of 1962. The price will again be $1.50, however, any amateur in the STATE of FLORIDA can avail themselves of the following offer. Send your call, name, address, city, zone number and phone number to Morris Stabin K4DW, 1136 S. W. 74th Ct., Miami 44, Fla. with just ONE Dollar and you will not only receive a Directory postpaid with your listing therein, but you will at the same time be helping a very worthy cause, THE VARIETY CHILDREN'S HOSPITAL. DEAD LINE FOR ABOVE SUBSCRIPTION IS NOVEMBER 1, 1962 Do it today. Sally and Me worked extremely hard on the first edition, and I wouldn't take a million for mine. AC

YL HANGNAILS

K4RDX-Anne M. Pitcher, RFD No. 2, Stuart, Fla., Ph-AT-7-3635; licensed Nov. 12, 1959; Birthday Aug. 13; 10-13 WPM; DX 40-HQ 170 & DB 23, S-38C-40 & 15 ant, 7.163-21.15-75 wtts; Likes rag chewing; Wud like A REC in Stuart; Housewife; been bookeeper Statistician, Music Teacher (private) Hobby small stamp collection, raising fish gardening. 1-16 yr old son-OM George. ARRL RCC. Son Kn4DBT, Geo. Jr.

KnUXO/4 Ruby McMillen, Rt No. 1 Box 117 B Inverness, Fla. Novice 6/12/59; 15 WPM, SX 101 A Globe Scout 15 mtrs. cw 65 Watts; office wk for Om's garage he is owner; 1 daughter Jo-Ann Age 14; OM Joe; Birthday Jan. 12/26.

W4KJE-Toni Delson Rt 7 Box 932, Pensacola. Birthday Oct. 23; "Willie's 4 kids Just Et"; General 1947; 10 mc nets, Pensacola EN; Homemaker; hobby-sports cars & swimming; 2 sons (generals) OM-W4JV; Clubs-Gulf Shores Sports Car Club; Pensacola Sports Car Club & Corresp. Sec; Don't Call her OW! hi.

K4MOV-Betty L. Simpson, 11-32 Elizabeth St., Eau Galle Ph-AL-4-5194; Conditional license; CD Award for Emergency traffic; Birthday Oct. 23; 15 WPM; mtrs. House wife, sewing, 1-6½ yr old son and 1 15 month old daughter; OM K4JCS; Clubs-Omega Alpha Tau Nat. Sorty-Alpha Mu Chapter.

AUCTION

Saturday — MAY 19
Starts 1 p.m. - rain or shine

ELECTRONIC WHOLESALERS, INC.

NW 27 AVENUE AT NW 94 STREET, MIAMI, FLORIDA

BRING your own gear! HERE is your golden-opportunity to unload what you no longer need, at no cost to you.

FANTASTIC AUCTION prices on Receivers, Transmitters, Beams, and all amateur accessories from ELECTRONIC WHOLESALER'S huge inventory.

ELECTRONIC WHOLESALERS, INC.

"Specializing In Everything Electronic"

N.W. 27th Ave., at N.W. 94th St.
Miami, Fla.
OX 6-1620

1301 Hibiscus Avenue
Melbourne, Fla.
PA 3-1441

PART IV

"THE STORY OF THE TRANSATLANTICS"

(We learned previously of attempts and failure to cross the pond in the first transatlantic tests. Paul Godley, 2ZE goes to Scotland. Preliminary 1000 mile tests. The final shakedown tests. And now, in England, Godley prepares for the big tests)

"In England"

"These arrangements were by no means for the special benefit of Mr. Godley (2ZE) but were to govern the entire tests. The arrangements in England were entirely in Mr. Coursey's hands and the data on the schedules was communicated only to him. To avoid any criticism Mr. Godley was told nothing except the free-for-all schedule, which was public information, but Mr. Coursey supplied him with a schedule of the times and wave lengths on which to listen, the same as he broadcasted to all British listeners, and kept strictly to himself the idenity and cyphers of the various stations. Mr. Coursey being in complete charge, Mr. Godley was on practically the same status as any British listener and was required to submit his reception to Mr. Coursey for verification and to report thru him.

Meanwhile the greatest enthusiasm seems to have greeted preparations for the tests, on the other side. The "Nederlandsche Vereeniging voor Radiotelegraphic" (Holland) wrote us (QST) for particulars and published them in their magazine, "Radio Nieuws", together with recommended Armstrong circuits for the short wave reception; and "La T.S.F. Moderne" (France) did the same for the Frencsh amateurs. "Wireless World" was the bulletin of the British amateurs, and it was here, of course, that the highest interest centered. Many amateurs seem to have gone to great lengths in their preparations, making special sets with many stages of tuned-output radio amplification - and we are very happy that the outcome of the tests justified their labor.

GODLEY PREPARES

While these arrangements were progressing "Paragon Paul" was busy too, building special amplifiers, testing various tuning arrangements, and experimenting with different aerials. When he succeeded in making 5ZA (Louis Falconi, Roswell, N. Mexico) work a relay in New Jersey without interference from New York amateurs he felt he had things around where they belong.

On Nov., 14th (1921) the night before he sailed, a very impressive little dinner was given him (2ZE) at The Engineers Club in New York City, where our ARRL officers and our directors within hailing distance and the officials of other radio organizations gathered to wish him success and bid him Godspeed. While the trail was to be a severe one and no man could with surety predict the outcome, optimism was distinctly the keynote and everybody was certain that if it could be done at all Paul would get signals. At this meeting credentials and written instructions were given him, together with a sealed pocket for Mr. Coursey (England) in which the secret codes and final schedules were given. There were two copies of these documents in existence and the duplicate was locked in the Hartford (ARRL) safe. Until the writing of the (original) article it was seen by no eyes in this country save those of our Traffic Manager (Fred Schnell, W4-FS, Bradenton, Fla.) - not even by the present writer. (Kenneth B. Warner, 1BHW, Editor of QST).

Godley sailed on the "Aqyitania" on Nov. 15th (1921), amid cheers and waving handkerchiefs of assembled radio friends and relatives, and for a couple of nights out the amateur air was thick with farewells and good wishes for 2ZE, Godley's home call, for everybody knew he would be in the static-room on the "Aquitania".

The second day out we radioed him: "Bon voyage The entire radio world is pulling for you" — to which he replied: Confidence increases as distance squared Broadcast my heartfelt appreciation".

Arrangements had already been made with the British authorities thru the kind cooperation of our State Department and Department of Commerce (Secretary Herbert Hoover, now ex-President USA, father of 6XH, who operated in these tests) for special authorization to Mr. Godley to bring in apparatus and erect and operate a receiving station, and to one familiar with the British laws, on radio it will be apparent that this was itself an accomplishment. Mr. Godley landed in Southhampton on the 21st (Dec. 1921) and proceeded to London, where he was shown every courtesy by the British-radio men. He had originally planned to make use of the receiving station of Commander Phillips, near London, which was kindly placed at his disposal, but results there being discouraging he moved up into Scotland and located at Ardrossan, a thriving shipbuilding port and watering place on the coast to the west of Glasgow. There he erected his apparatus, accompanied by his official listener, Mr. D. E. Pearson, District Inspector of the Marconi Company at Glasgow, who stood a constant watch with him during the tests and verified the reception of every signal.

AMATEUR OF THE MONTH

The amateur of the month is Ted Caldwell K4IFQ of West Palm Beach. Ted describes himself as having been "Ham-happy" since 1934. However, he waited until 1955 to obtain his first license . . . VP7HH as a temporary of Bermuda and also K4IFQ at the same time. Soon after receiving his license, he took part in a DX contest, and recalls hearing "the band cave-in" as one of his most exciting on-the-air- experiences.

Even more exciting in-the-air experience took place in 1954 when he flew through 2 different hurricanes in one day while he was working with a weather-research project!

Ted is active on 6, 10 and 40. He has been a member of the West Palm Beach Radio Club for several years, and was club president a couple of years ago.

An electrical engineer, Ted formerly lived in the midwest. He came to Florida about 12 years ago (with time out for Bermuda), and has lived in this area for 5½ years. His home is in the Lake Clarke Shores. 73, Bob Hope, W4GWF, Editor THE SAILFISHER.

LETTER TO EDITOR

Editor: Florida Skip

Was most pleased to receive your acknowledgement of my renewal to Florida Skip upon my return home from Baltimore. It's nice to know that I have a dozen more issues to look forward to.

Met quite a number of the gang in W3 land and had a lot of interesting "eyeball QSO's while in the area.

During the three weeks I spent there I was privileged to attend as my niece's escort, the Inaugural Anniversary Dinner in honor of President Kennedy where I was introduced to several celebrat i e s including Rosemary Clooney, Danny Thomas and got a nice smile from Mrs. JFK.

To get back to earth again-my first out of state contact on 75 SSB from up here was K4QPR, Judd, of Sarasota, using a simple dipole antenna. Have worked out well on the other bands also and am looking forward to many Florida contacts while up here in the far northwest.

Our place here is located on six acres and, in back of the house, we have a little place comprising a living-room - bedroom combination with kitchen and bath. This will, of course, become the ham shack.

So there you are, Andy. We miss Florida sunshine, but at least we can keep in touch via amateur wireless. Please say hello to the gang for me and tell 'em we're scanning the bands for W4 !!

73 es cul
Robbie W4YFW/7
Poulsbo, Washington

WORDS OF WISDOM

Sympathy is never wasted except when you give it to yoursef . . . . If you never stick your neck out, you'll never get your head above the crowd . . . . The enemy of the best is not the worst but the good enough . . . . There are in nature neither rewards nor punishments — there are consequences . . . . Don't find fault — find a remedy. Anybody can complain . . . . Don't bunch up on the low end of the band — spread out, spread out.

TWO METER SEVEN-ELEVEN TRAFFIC NET

Slim WA4AZZ and Mike WA4BMC

During March the Net had 31 sessions and handled 737 pieces of traffic, with an everage of 23.77. Net coverage during the month extended from South Venice, Ft. Myers and Tampa and Bradenton on the west coast to Eau Galle, Melbourne and Ft. Pierce, north Lake Worth, to Homestead and Key West. Largest number of check-ins during one session was on April 4, at 1900 with 11 stations participating, ranging from Miami to Ft. Pierce and west to Clewiston. On March 16 at 1900 fortytwo pieces of traffic were handled.

We all have missed Les K4RNG, who has been in the hospital at Homestead AFB. We hope he can come home soon. We miss his insults and teasing and hope to hear them again soon. Hurry back on the air, Les.

We welcome to two meters and to the net the following stations: W4UCI/4, visiting rfom Key West: W4CWD, Duane, Melbourne: K4JZU and K4JZX, Rollin and Joan, Ft. Pierce: K2ULB/4 and WV2YOD/4, Dean and Joan, North Palm Beach: WA4AXB, Gene, Land O' Lakes: and W4VNF, Dick, Riviera Beach. W4VTJ, Jay Lantana, has checked into the Net several times.

K4JZU is getting his beam higher this weekend and adding a home brew section to it. W4CWD has a tower ordered. We are looking forward to very strong signals from Ft. Pierce and Melbourne soon.

Thanks to Red, K4GPJ, Hialeah, for being on frequency during K4RNG's illness, for Miami traffic.

John, WN4BYQ, and his Dad, WN4BYP, are now techs with the calls of WA4BYP and WA4BYQ. Win, WA4COR now has his Conditional license. Congratulations to all three of them.

Sure nice to hear WN4BPT, EB from Fe. Myers and WN-4EEM, Ed, from Punta Gorda. Also we occasionally hear WA4ABO, Bill, Frostproof: K4KKZ, Dick, South Venice: K4QOP, John, West Palm Beach; and K4PKC, Rae, from Stuart.

Our regular members, participating each session, are K4SJH, Ham, Pompano Beach WA4BYP, John, Ft. Lauderdale; WA4COR, Win, West Palm Beach; K4TBG, Kay, Lake Worth; and WV2YOD/4, Joan, North Palm Beach.

Semi-regulars are C l i f f, K4LLI, Delray Beach; Donn, W4WTO, Margate; Bill K4-UXC, Ocean Ridge; John, WN4FNF, Indiantown; Harley, K4ZDV/4, Belle Glade; and Tommy, W4PNS, Clewistown.

Sure miss Bob, WN4AKU, Stuart and Wes, WN4AME, Jensen Beach. Hurry up fellows and get your Tech tickets.

Hope this column next month can report regular check-ins from Tampa, Ft. Myers, Gainsville, Pensacola, and Key West. Come on and turn your beams toward Lake Worth at 1900 each night. Roll call only takes about twenty minutes and then the traffic is immediately passed. We want State Wide coverage by Hurricane Season.

ARMED FORCES DAY

Once again you have a chance to pick up a nice Armed Forces Day QSL or certificate on May 19, 1962. Full freguencies are listed in other pulications however the following are suggested for Florida amateurs: C.w. receiving contest 200300Z (2200 EST May 19th NSS 3319, 4010 or 6970kc: RTTY receiving 200-335Z (2235 EST) NSS 3319, 7895, 14480kc or AIR 7915kc. Each transmission for the c. w. and RTTY receiving contests will commence at the indicated times with a ten minute CQ call to permit participants to adjust their equipment. The 10 minute CQ will be immediately followed by the message from SECDEF. It is not necessary to copy more than one station and no extra credit will be given for so doing.

Competition entries should be submitted to the Armed Forces Day Contest, Room 5B960, The Pentagon, Washington, D.C. and postmarked not later than May 3, 1962. Good Luck!

! ! FREE COFFEE AND DONUTS ! !

Florida's largest old-fashioned hamfest will again be held Sunday, May 20 at Philippe Park near Safety Harbor. Again, .001 kilobuck will entitled Sam, Susie and all the harmonics to a glorious day of fun and frolic along the shores of Old Tampa Bay. A day filled with something for children of all ages!

We have at last found the perfect area in the park for our 'fest! The amphitheater has been covered over (but not closed in) and will shelter you and yours from the elements if Mother N a t u r e should decide to become uncooperative. (A woman's perogative, you know!)

In addition to the main area, we have a small beach a short distance away on which to enjoy the water and sunshine. We have a large tree shaded area next to the main area and large grassy slopes on which the harmonics can romp to their heart's delight in full view of XYL's.

Again, the $1 donation will entitle you to admission and one chance on the prize drawing. Additional tickets on the drawing may be secured by making additional donations. The harmonics will be kept happy with comic books, baloons, etc., as usual and free candy after lunch.

Bring your picnic lunch. If the food doesn't suit you — don't blame us, hi!! Refreshments will be available at the park refreshment stand.

Now for the facts. Mobiles monitor 50.7 and 29.000 for "Operation Talk-In". We will be on the air from 0800 to aid you in finding us. Safety Harbor lies just north of state route 60 which runs over the causeway from Tampa to Clearwater. The road to safety Harbor intersects route 60 about mid-point between the causeway and U. S. 19.

Free coffee and donuts from 0800 'til they're all gone! Early bird prize drawing at 0930. Welcoming and introduction of special guests at 1030. Picnic lunch from 1100 to 1300. Prize drawing at 1330. Over and done with in time to leave for home around 1600.

Bring your old gear for our swap table. Tags will be furnished for the various items.

The prize committee is busily at work to give you a good long list of prizes. Top prize will be something useful to anyone who should be fortunate enough to win it. Loads of ham items to be given away.

This is THE hamfest of the year!! This is the one the whole family can enjoy. If you liked our big deal last year, come see us again and tell us again and tell all your friends about us. See you at the hamfest.

73 Jim K4USK

THE DEAR MABEL XYL AWARD

Dear Mabel,

Applications for the DEAR MABEL XYL AWARD have been averaging 5 per day; to date 325 Awards have been issued. Awards have been sent to 41 States, with 121 Awards going to XYL's of Florida OMs. Awards have been sent to Argentina, Canada, Denmark, Japan, Poland, and Puerto Rico. One application arrived via "long skip." It was from Jay, W4NXL-/MM, who applied for the Award via Air Mail Post from Singapore, while aboard the S. S. Petrosea. Jay's XYL is Mary C. Spiegel; their QTH is Miami!

March QST announced the award in the YL News and K6BX, Clif gave the Award a wonderful spot, along with the other FLORIDA SKIP AWARDS in "The Directory Of Certificates And Awards." He says to watch for May "CQ" for another nice write up.

Some very wonderful letters in praise of the XYLs have arrived with the applications and everyone seems delighted with the Award. Many Oms have sent stamps, coins, or IRCs to help defray the cost of handling and I'd like to thank each one of them at this time. Several have requested schedules and just as soon as time permits I'll answer each request and arrange to contact them on the air.

I've been delighted with the pictures many OMs have sent of themselves and their XYLs. I know you'll want to see these pictures, so I'll mount them in an album and show it to you the next time we get together.

33 Anne Pitcher, K4RDX
RFD No. 2 Stuart, Florida.

LETTER TO EDITOR

Editor, Florida Skip:

TWO BIRDS WITH ONE STONE!

It can be done, maybe even three birds in this manner. Let our experiments get on with HAM TV and use 10 and 6 meters for the yak yak. Ham TV is best located at 432 Mc.

For those interested in Ham TV, Mel Shadbolt WOYKQ, has written an interesting book available thru 73 magazine. Even for those not interested in HAM TV, I recommend this book for the information on HF and TV.

It is claimed that you can get on HAM TP for about $50.00 and a couple old TV sets. By using the 10 and 6 meter bands for the "sound" we kill two birds with one stone and keep two or by w o r k i n g crossband three bands in operation. Sounds good to me.

Am happy to see that SKIP and other publications are alert to the danger of losing other bands to CB and others. Possibly we could explore NBFM for VHF nets and other services.

Al Johnson, W4LSA

67 W. 10th St., Hialeah.

W4MIE STRIKES AGAIN

No doubt by this time those of you who support ARRL and receive QST have read the "HURRICANE SET" story in March QST by George L. Thurston, W4MLE, SEC Western Florida. With words and music by MLE and photos by IYT, Florida scored another victory AREC-wise. As the QST Editor said, it was the "first time any state SET report appeared on it's own," or words to that effect. Since the SET story appeared Ye Editor has been receiving requests from all over the USA and Canada for copies of the Florida State AREC Plan! All requests have been filed. Proudly I might ad.

We are still working out details on the new State AREC Manual of Operations. If all goes according to plan all Florida ECs (Emergency Coordinators, A R R L) will have a supply of these manuals for their members before we get into hurricane season. They will be available to anyone as well. Watch this spot.

LETTER TO EDITOR

EDITOR, FLORIDA SKIP:

Confirming telephone conversation of today. Please see QST for April pages 64 and 65 "Golden Anniversary of Licensing" article entitled "50 years of Licensing".

We are pleased to advise we will have the honor of being present.

We were 3JU Baltimore, Md. in the July 1, 1913 Call Book. We received our license the month they were first issued, December 1912, and have been in every Call Book since as 3JU, 3EK, 2TF, W8-QIO, W2TF and now W4TY.

The list of old Timers Club members appear in April CQ 1962, pages 16 and 18.

The OOTC meet on 14295kc Mon-Fri 1300 E S T S S B. Thursday 3940 kc AM at 1900 EST.

Earl E. Clene Sr. W4PPZ, President, announced at the round table yesterday, all members should send a 2X2 photo (head and sholders) of themselves promptly, press deadline for tre Blue Book in early May. (first issue.)

Bob Fenimore, W4TY
St. Petersburg, Fla.

HAM PHONE DIRECTORY

Just got thru mailing advance subscription applications to most hams in the Greter Miami area. This was done primarily to give you all an opportunity to make any changes in the way your listed in the first issue and also to get an idea of how many copies to print this time.

By your subscribing in advance it is not only possible to lower the price to one dollar postpaid but also to turn over any and all profits to the Variety Childrens Hospital in one lump sum practically as soon as the directories are off the press. This advance subscription offer is extended to any amateur radio operator in FLORIDA. Applications will be available soon through all radio clubs secretaries who will be kind enougr to write me for a complimentary copy of the first edition of the Directory which I will send to them by return mail together with any amount of advance subscribtion blanks for their members and air buddies.

To all other hams you can also send in, Name, Address, City and Phone Number plus one dollar to Morris Stabin K4DJW, 1136 SW 74th Ct., Miami 44, Florida. Don't procrastinate, the sooner you send your order in, the sooner we will know by how much we can top the three rundred dollars that the first issue was able to net in profits for the Variety Childrens Hospital. 73 Moe K4DJW.

HARS NEWS

Boy Scott, W4UHF

HARS now has an official licensed amateur station, WA-4GJJ with Ray Murphy W4-BNE as trustee. Station equipment will be constructed and housed in the Band Shelter building as soon as modifications of the building are completed under the supervision of Del Bonnot, W4EDZ. This will also be an additional communications center f or CD in emergencies.

A joint picnic for members of HARS AND TARC (Tampa Amateur Radio Club) is scheduled for June. Details, time and place in the June SKIP.

The general meeting May 22nd will feature Vance Vogel W4OVE, in a talk on "OPERATING TECHNIQUES IN EMERGENCY COMMUNICATIONS." Vance is SSB Emergency Net Manager, active with Intercontinental Net, and has been an amateur for 28 years. He has had a very colorful career and was a Major in OSS during WW2 in charge of communications. He has been a Floridian for 15 years and was formerly W7-GQG in the State of Idaho.

Ray Murphy, W4BNE, president of HARS, has been appointed new Emergency ARRL Coordinator for Hillsborough County and has appointed the following Assistant EC's: K4YOQ, Jim Apsey; W4UHF, Roy Scott; K4-IAL, Roy Reel; W4NQX, Paul Young; K4FQP, Jim Lauritsen; W4OVE, Vance Vogel; K4HFF, Earl Miller; K4YHI, Joe Turrentine; W4YOG, Ed Benson and K4PDR, Lou ellavia.

Civil Defense Communications Activities will include an OPAL-62 Drill, Friday May 11, 1962 from 8 PM till midnight in co-operation with the Radiological and Auxiliary Police Units. Control will be from CD Hqrs in Bay View Hotel, Tampa on 3940kc SSB; 50.5 mc and 147.25mc. Mobile and Emergency units will be activated where necessary.

HAMBAR

FOR SALE: Two new 4CX250B's and one new 4-400A $22 each. J.W. Gregory K4OCK, 3000 SW 103rd Ct., Miami, Fla. C A6-3434.

FOR SALE: Hallicrafter SX-111 spotless, used only few hours $190. Globe Chief DeLuxe transmitter, modulator, crystal, key, relay, perfect condition $55. Howard Winner W4SWY, 9100 SW 61st Ct., Miami MO 7-3127.

WANTED: Contacts or schedules on 425-435 mc AM and 435-445 TV. Please contact Al Johnson W4LSA, 67 West 10th St., Hialeah, Fla.

FOR SALE: GONSET receiver 108-155 mc commercial type with schematic $35. 24 hour clock $7. Transformer 400 each side at 500 ma., 2 6.3 windings and 5 v for $5. Many tubes and transformers condensors etc. Howard Moore, K3EYO, 444 SW 30th Ave., Miami 35, Fla. HI 4-1859.

W4NVF TO 1220 Mc.

Word from Lloyd Proebsting K4ISH, 310 SW 59th Ave., Miami advises another Miami station, W4NVF, is looking for contacts on 1220 mc. Floyd worked Roy (NVF) for a solid 45 minutes on 1220mc last month. Both using the APX-6.

Since Lloyd's story appeared in SKIP and "VHF AMATEUR" the APX-6 has disappeared from the surplus market, or have jumped in price by 3 to 4 times. The Surplus dealers are putting the bite on the amateurs now that the amateurs figured out a way to make their $10.95 units useable.

If anyone in the state is interested in a sked on 1220 mc. drop a line to ISH at address above.

Florida Traffic Nets

Florida CW Net — (QFN) 3650kc at 2330Z & 0300Z-Daily.

Florida Midday Traffic Net — 7230kc at 1700Z.

Florida Phone Traffic Net — 3945Z at 1200X 13-15 wpm

Florida Slow Speed Net — speed 13-15wpm

Florida SSB Net — 3940 kc at 2400Z.

(QFNS), 3650kc at 0100Z, West Florida Phone Net — (morning) 3830kc at 1200Z (evening) 3836kc at 2300Z Novice Hurricane Net — 3725kc at 1200Z Sundays Gator Net — 3650kc Daily 1330Z.

Florida R T T Y Mon/Fri 0230Z 3637 kc

TWO METER SEVEN-ELEVEN TRAFFIC NET

Slim WA4AZZ and Mike WA4BMC

During March the Net had 31 sessions and handled 737 pieces of traffic, with an everage of 23.77. Net coverage during the month extended from South Venice, Ft. Myers and Tampa and Bradenton on the west coast to Eau Galle, Melbourne and Ft. Pierce, north Lake Worth, to Homestead and Key West. Largest number of check-ins during one session was on April 4, at 1900 with 11 stations participating, ranging from Miami to Ft. Pierce and west to Clewiston. On March 16 at 1900 fortytwo pieces of traffic were handled.

We all have missed Les K4RNG, who has been in the hospital at Homestead AFB. We hope he can come home soon. We miss his insults and teasing and hope to hear them again soon. Hurry back on the air, Les.

We welcome to two meters and to the net the following stations: W4UCI/4, visiting rfom Key West: W4CWD, Duane, Melbourne: K4JZU and K4JZX, Rollin and Joan, Ft. Pierce: K2ULB/4 and WV2YOD/4, Dean and Joan, North Palm Beach: WA4AXB, Gene, Land O' Lakes: and W4VNF, Dick, Riviera Beach. W4VTJ, Jay Lantana, has checked into the Net several times.

K4JZU is getting his beam higher this weekend and adding a home brew section to it. W4CWD has a tower ordered. We are looking forward to very strong signals from Ft. Pierce and Melbourne soon.

Thanks to Red, K4GPJ, Hialeah, for being on frequency during K4RNG's illness, for Miami traffic.

John, WN4BYQ, and his Dad, WN4BYP, are now techs with the calls of WA4BYP and WA4BYQ. Win, WA4COR now has his Conditional license. Congratulations to all three of them.

Sure nice to hear WN4BPT, EB from Fe. Myers and WN-4EEM, Ed, from Punta Gorda. Also we occasionally hear WA4ABO, Bill, Frostproof: K4KKZ, Dick, South Venice: K4QOP, John, West Palm Beach; and K4PKC, Rae, from Stuart.

Our regular members, participating each session, are K4SJH, Ham, Pompano Beach WA4BYP, John, Ft. Lauderdale; WA4COR, Win, West Palm Beach; K4TBG, Kay, Lake Worth; and WV2YOD/4, Joan, North Palm Beach.

Semi-regulars are C l i f f, K4LLI, Delray Beach; Donn, W4WTO, Margate; Bill K4-UXC, Ocean Ridge; John, WN4FNF, Indiantown; Harley, K4ZDV/4, Belle Glade; and Tommy, W4PNS, Clewistown.

Sure miss Bob, WN4AKU, Stuart and Wes, WN4AME, Jensen Beach. Hurry up fellows and get your Tech tickets.

Hope this column next month can report regular check-ins from Tampa, Ft. Myers, Gainsville, Pensacola, and Key West. Come on and turn your beams toward Lake Worth at 1900 each night. Roll call only takes about twenty minutes and then the traffic is immediately passed. We want State Wide coverage by Hurricane Season.

ARMED FORCES DAY

Once again you have a chance to pick up a nice Armed Forces Day QSL or certificate on May 19, 1962. Full freguencies are listed in other pulications however the following are suggested for Florida amateurs: C.w. receiving contest 200300Z (2200 EST May 19th NSS 3319, 4010 or 6970kc: RTTY receiving 200-335Z (2235 EST) NSS 3319, 7895, 14480kc or AIR 7915kc. Each transmission for the c. w. and RTTY receiving contests will commence at the indicated times with a ten minute CQ call to permit participants to adjust their equipment. The 10 minute CQ will be immediately followed by the message from SECDEF. It is not necessary to copy more than one station and no extra credit will be given for so doing.

Competition entries should be submitted to the Armed Forces Day Contest, Room 5B960, The Pentagon, Washington, D.C. and postmarked not later than May 3, 1962. Good Luck!

! ! FREE COFFEE AND DONUTS ! !

Florida's largest old-fashioned hamfest will again be held Sunday, May 20 at Philippe Park near Safety Harbor. Again, .001 kilobuck will entitled Sam, Susie and all the harmonics to a glorious day of fun and frolic along the shores of Old Tampa Bay. A day filled with something for children of all ages!

We have at last found the perfect area in the park for our 'fest! The amphitheater has been covered over (but not closed in) and will shelter you and yours from the elements if Mother N a t u r e should decide to become uncooperative. (A woman's perogative, you know!)

In addition to the main area, we have a small beach a short distance away on which to enjoy the water and sunshine. We have a large tree shaded area next to the main area and large grassy slopes on which the harmonics can romp to their heart's delight in full view of XYL's.

Again, the $1 donation will entitle you to admission and one chance on the prize drawing. Additional tickets on the drawing may be secured by making additional donations. The harmonics will be kept happy with comic books, baloons, etc., as usual and free candy after lunch.

Bring your picnic lunch. If the food doesn't suit you — don't blame us, hi!! Refreshments will be available at the park refreshment stand.

Now for the facts. Mobiles monitor 50.7 and 29.000 for "Operation Talk-In". We will be on the air from 0800 to aid you in finding us. Safety Harbor lies just north of state route 60 which runs over the causeway from Tampa to Clearwater. The road to safety Harbor intersects route 60 about mid-point between the causeway and U. S. 19.

Free coffee and donuts from 0800 'til they're all gone! Early bird prize drawing at 0930. Welcoming and introduction of special guests at 1030. Picnic lunch from 1100 to 1300. Prize drawing at 1330. Over and done with in time to leave for home around 1600.

Bring your old gear for our swap table. Tags will be furnished for the various items.

The prize committee is busily at work to give you a good long list of prizes. Top prize will be something useful to anyone who should be fortunate enough to win it. Loads of ham items to be given away.

This is THE hamfest of the year!! This is the one the whole family can enjoy. If you liked our big deal last year, come see us again and tell us again and tell all your friends about us. See you at the hamfest.

73 Jim K4USK

THE DEAR MABEL XYL AWARD

Dear Mabel,

Applications for the DEAR MABEL XYL AWARD have been averaging 5 per day; to date 325 Awards have been issued. Awards have been sent to 41 States, with 121 Awards going to XYL's of Florida OMs. Awards have been sent to Argentina, Canada, Denmark, Japan, Poland, and Puerto Rico. One application arrived via "long skip." It was from Jay, W4NXL-/MM, who applied for the Award via Air Mail Post from Singapore, while aboard the S. S. Petrosea. Jay's XYL is Mary C. Spiegel; their QTH is Miami!

March QST announced the award in the YL News and K6BX, Clif gave the Award a wonderful spot, along with the other FLORIDA SKIP AWARDS in "The Directory Of Certificates And Awards." He says to watch for May "CQ" for another nice write up.

Some very wonderful letters in praise of the XYLs have arrived with the applications and everyone seems delighted with the Award. Many Oms have sent stamps, coins, or IRCs to help defray the cost of handling and I'd like to thank each one of them at this time. Several have requested schedules and just as soon as time permits I'll answer each request and arrange to contact them on the air.

I've been delighted with the pictures many OMs have sent of themselves and their XYLs. I know you'll want to see these pictures, so I'll mount them in an album and show it to you the next time we get together.

33 Anne Pitcher, K4RDX
RFD No. 2 Stuart, Florida.

LETTER TO EDITOR

Editor, Florida Skip:

TWO BIRDS WITH ONE STONE!

It can be done, maybe even three birds in this manner. Let our experiments get on with HAM TV and use 10 and 6 meters for the yak yak. Ham TV is best located at 432 Mc.

For those interested in Ham TV, Mel Shadbolt WOYKQ, has written an interesting book available thru 73 magazine. Even for those not interested in HAM TV, I recommend this book for the information on HF and TV.

It is claimed that you can get on HAM TP for about $50.00 and a couple old TV sets. By using the 10 and 6 meter bands for the "sound" we kill two birds with one stone and keep two or by w o r k i n g crossband three bands in operation. Sounds good to me.

Am happy to see that SKIP and other publications are alert to the danger of losing other bands to CB and others. Possibly we could explore NBFM for VHF nets and other services.

Al Johnson, W4LSA
67 W. 10th St., Hialeah.

W4MIE STRIKES AGAIN

No doubt by this time those of you who support ARRL and receive QST have read the "HURRICANE SET" story in March QST by George L. Thurston, W4MLE, SEC Western Florida. With words and music by MLE and photos by IYT, Florida scored another victory AREC-wise. As the QST Editor said, it was the "first time any state SET report appeared on it's own," or words to that effect. Since the SET story appeared Ye Editor has been receiving requests from all over the USA and Canada for copies of the Florida State AREC Plan! All requests have been filed. Proudly I might ad.

We are still working out details on the new State AREC Manual of Operations. If all goes according to plan all Florida ECs (Emergency Coordinators, A R R L) will have a supply of these manuals for their members before we get into hurricane season. They will be available to anyone as well. Watch this spot.

LETTER TO EDITOR

EDITOR, FLORIDA SKIP:

Confirming telephone conversation of today. Please see QST for April pages 64 and 65 "Golden Anniversary of Licensing" article entitled "50 years of Licensing".

We are pleased to advise we will have the honor of being present.

We were 3JU Baltimore, Md. in the July 1, 1913 Call Book. We received our license the month they were first issued, December 1912, and have been in every Call Book since as 3JU, 3EK, 2TF, W8-QIO, W2TF and now W4TY.

The list of old Timers Club members appear in April CQ 1962, pages 16 and 18.

The OOTC meet on 14295kc Mon-Fri 1300 E S T S S B. Thursday 3940 kc AM at 1900 EST.

Earl E. Clene Sr. W4PPZ, President, announced at the round table yesterday, all members should send a 2X2 photo (head and sholders) of themselves promptly, press deadline for tre Blue Book in early May. (first issue.)

Bob Fenimore, W4TY
St. Petersburg, Fla.

HAM PHONE DIRECTORY

Just got thru mailing advance subscription applications to most hams in the Greter Miami area. This was done primarily to give you all an opportunity to make any changes in the way your listed in the first issue and also to get an idea of how many copies to print this time.

By your subscribing in advance it is not only possible to lower the price to one dollar postpaid but also to turn over any and all profits to the Variety Childrens Hospital in one lump sum practically as soon as the directories are off the press. This advance subscription offer is extended to any amateur radio operator in FLORIDA. Applications will be available soon through all radio clubs secretaries who will be kind enougr to write me for a complimentary copy of the first edition of the Directory which I will send to them by return mail together with any amount of advance subscribtion blanks for their members and air buddies.

To all other hams you can also send in, Name, Address, City and Phone Number plus one dollar to Morris Stabin K4DJW, 1136 SW 74th Ct., Miami 44, Florida. Don't procrastinate, the sooner you send your order in, the sooner we will know by how much we can top the three rundred dollars that the first issue was able to net in profits for the Variety Childrens Hospital. 73 Moe K4DJW.

HARS NEWS

Boy Scott, W4UHF

HARS now has an official licensed amateur station, WA-4GJJ with Ray Murphy W4-BNE as trustee. Station equipment will be constructed and housed in the Band Shelter building as soon as modifications of the building are completed under the supervision of Del Bonnot, W4EDZ. This will also be an additional communications center f or CD in emergencies.

A joint picnic for members of HARS AND TARC (Tampa Amateur Radio Club) is scheduled for June. Details, time and place in the June SKIP.

The general meeting May 22nd will feature Vance Vogel W4OVE, in a talk on "OPERATING TECHNIQUES IN EMERGENCY COMMUNICATIONS." Vance is SSB Emergency Net Manager, active with Intercontinental Net, and has been an amateur for 28 years. He has had a very colorful career and was a Major in OSS during WW2 in charge of communications. He has been a Floridian for 15 years and was formerly W7-GQG in the State of Idaho.

Ray Murphy, W4BNE, president of HARS, has been appointed new Emergency ARRL Coordinator for Hillsborough County and has appointed the following Assistant EC's: K4YOQ, Jim Apsey; W4UHF, Roy Scott; K4-IAL, Roy Reel; W4NQX, Paul Young; K4FQP, Jim Lauritsen; W4OVE, Vance Vogel; K4HFF, Earl Miller; K4YHI, Joe Turrentine; W4YOG, Ed Benson and K4PDR, Lou ellavia.

Civil Defense Communications Activities will include an OPAL-62 Drill, Friday May 11, 1962 from 8 PM till midnight in co-operation with the Radiological and Auxiliary Police Units. Control will be from CD Hqrs in Bay View Hotel, Tampa on 3940kc SSB; 50.5 mc and 147.25mc. Mobile and Emergency units will be activated where necessary.

HAMBAR

FOR SALE: Two new 4CX250B's and one new 4-400A $22 each. J.W. Gregory K4OCK, 3000 SW 103rd Ct., Miami, Fla. C A6-3434.

FOR SALE: Hallicrafter SX-111 spotless, used only few hours $190. Globe Chief DeLuxe transmitter, modulator, crystal, key, relay, perfect condition $55. Howard Winner W4SWY, 9100 SW 61st Ct., Miami MO 7-3127.

WANTED: Contacts or schedules on 425-435 mc AM and 435-445 TV. Please contact Al Johnson W4LSA, 67 West 10th St., Hialeah, Fla.

FOR SALE: GONSET receiver 108-155 mc commercial type with schematic $35. 24 hour clock $7. Transformer 400 each side at 500 ma., 2 6.3 windings and 5 v for $5. Many tubes and transformers condensors etc. Howard Moore, K3EYO, 444 SW 30th Ave., Miami 35, Fla. HI 4-1859.

W4NVF TO 1220 Mc.

Word from Lloyd Proebsting K4ISH, 310 SW 59th Ave., Miami advises another Miami station, W4NVF, is looking for contacts on 1220 mc. Floyd worked Roy (NVF) for a solid 45 minutes on 1220mc last month. Both using the APX-6.

Since Lloyd's story appeared in SKIP and "VHF AMATEUR" the APX-6 has disappeared from the surplus market, or have jumped in price by 3 to 4 times. The Surplus dealers are putting the bite on the amateurs now that the amateurs figured out a way to make their $10.95 units useable.

If anyone in the state is interested in a sked on 1220 mc. drop a line to ISH at address above.

Florida Traffic Nets

Florida CW Net — (QFN) 3650kc at 233OZ & 0300Z-Daily.

Florida Midday Traffic Net — 7230kc at 1700Z.

Florida Phone Traffic Net — 3945Z at 1200X 13-15 wpm

Florida Slow Speed Net — speed 13-15wpm

Florida SSB Net — 3940 kc at 2400Z.

(QFNS), 3650kc at 0100Z, West Florida Phone Net — (morning) 3830kc at 1200Z (evening) 3836kc at 2300Z Novice Hurricane Net — 3725kc at 1200Z Sundays Gator Net — 3650kc Daily 1330Z.

Florida R T T Y Mon/Fri 0230Z 3637 kc

HAMBAR

NOTE: Florida Skip does not assume any responsibility for condition, price, etc. of any items listed in this column.

This column is FREE to any licensed Radio Amateur. There is no limit to the number of items any individual may list. All listings are cancelled each month. If your listing is not moved, it will be necessary to relist the following month.

CLASSIFIED and COMMERCIAL ADVERTISING RATES:

To Licensed Amateurs; Buy, Swap, Sell (non-commercial) — Free.

To Commercial Business; Classified, undisplayed — 50c per line; Illustrative or General Display with border — $3.50 min., $80 / page; Initial cost of cuts, additional. Cuts furnished, no charge.

An Advertising inch is measured 7/8" vertically on one column, i.e., 4 columns — 40 column inches to a page. Rate card by column inch supplied upon request. FLORIDA SKIP, Advertising Department, P.O. Box 501, Miami Springs, Fla.

FOR SALE: W5DX hybrid phone patch-transformers, capcitors, schematic and operational information $4.30 post-paid. (Requires use of receiver with 4 and 500 ohm audio output). Get balance of needed parts any radio store for about $11. Hud Gillis W4UEL, 12420 SW 62nd Ave., Miami 56, Fla. Tel 661-1234.

WANTED: All Florida "ttchnicians" write Armond Noble K7-MPA, Editor of the new magazine called "Technician" box 465, Billings, Montana for a sample copy. It is designed only for the Technicians. Get a real surprise and support this new amateur publication.

WILL SWAP: Johnson Viking Valiant factory wired and mint condition not a scratch or blemish and a Heath Sixer, latest model like new used only about 2 hours with a Hy-Gain five element beam never used for a Gonset GSB-100 or Heath Apache and SB-10 combination. No beat up stuff please. G. F. Frazier W4TAI, 12 Golden Isle, Dr., Mount Dora, Fla.

FOR SALE: Globe King 500-C $495. SX-100 in new condition $225, factory wired 6 and 2 Johnson converter in new condition with 14 to 18 mc IF $55. Factory wired Elmac M1070 power supply in unopened box, make offer. One new setl 0 to 80 meter reyco coils $10. Will take a good mobile rig on trade on King. All equipment is in excellent condition and is not junk. B. E. Cole, K4LZW, 4708 Wisconsin Ave., Tampa 11, Fla.

FOR SALE: Garrard RC-88/4 automatic record changer with two pick-up heads; G.E. VR II triple play cartridge with D-001 and S-003 stylus. Webster Electric stereo cartridge SC1-D with .7 mil diamond stylus. All for $48. National SOJ-3 Select-o-ject $7. Eugene Blakae K4OHR, 1806 Biggs Dr., Tallahassee, Fla.

FOR SALE: Apache and SB-10 in excellent working condition and they look liken ew. The first $250 takes them FOB Sarasota. J. H. Nicholson W4BU, 825 Windsor Dr., Sarasota, Fla .Phone 355-4479.

FOR SALE: Like new Johnson "500", factory wired. Jim Handey W4GDO, 3761 East 8th Ave., Hialeah, Fla .Phone 691-1654.

FOR SALE: Dynamotor PE-103 $2. Heath Signal Generator LG-1 $15. Heath hi-fi EA-3 $15. John Kessel W4HQW, 64 Whitethorn Dr., Miami Springs 66, Fla. Phone TU 8-7069.

FOR SALE: Johnson Challenger transmitter ne wfinal tubes, 120 watts cw and 70 phone, 80 thru 6 meters, manual, good condition $80. Delivered ur QTH. Jim Perry K4WVX, 2691 - 56th St., North, St. Petersburg, Fla.

FOR SALE: Globe LA-1 linear amplifier, excellent condition. Sell for $75 or trade for any commercial SSB exciter, SB-10, 10A etc. LA-1 runs 200 watts a.m. 420 W. PEP with 5 watts input. Also SCR 522A transmitter with power supplies, converted to 10 meters $35. Earl Spencer K4FQU, 1413 Davis Dr., Ft. Myers, Fla. WE 6-1202.

COMPLETE HAM STATION: 2 meter to 80 meters, 2 xmtrs — Seneca and Apache in mint condition SX-99 receiver and factory matched speaker with Nuvistor converters and preamplifier for 6 and 2 meters. Antenna switching control box with 2 coax relays and power supply. Aluminum tower tiltover with beam rotator AR-22 and 11 element 2 meter beam, 6 el 6 meter beam and 3 elemnt tribandr Mosley TA-33 Jr. Also 40 and 80 meter inverted vee dipoles and coax cables. Now in operation at home QTH. Going mobile on long trailer vacation. Stan Bittner W4JJK, 3081 Mary St., Miami.

FOR SALE: SB-40 Hallicrafters $50 and S20-R $35. 20 watt speech amp $15. Bogen amp model 66 $20. Bell wire recorder play back, phone radio $50. 6 meter FM trans rcvr complete $15. Ed W. Vernier W4HTH, 6935 - 9th Ave. North, St. Petersburg, Fla.

FOR FREE: Get your XYL a beautiful 4-color certificate all her own from DEAR MABEL. It's something brand new. We are sure it will make her happy. Write Anne Pitcher K4RDX, RFD 2, Stuart, Florida giving xyl's first name your call and QTH.

FOR SALE: Motorla "Weatherama" 8 transistor radio, has 2 bands, covers low freqs, becon, range and weather bands, plus BC band. Can be used for homing on a station with directional antenna. Like new with new batteries, it cost $79 last fall, will sell for $45. Have another transistor radio 10 transistor BC band $20. Pecision Signal Generator in good condition and Heathkit tube checker, make offer. Stan Bittner W4JKK, 3081 Mary St., Miami MI8-9488.

PERSONAL: Sam Ham: If you can possibly make it to our Hamfest on May 20, all your friends are waiting to see you. Bring Susie and the Harmonics. Details elsewhere in this month's SKIP. — S.P.A.R.C.

FOR SALE: JOHNSON 250-20 1 KW 52 Ohm TVI filter, low pass. $7.50. G. H. Booras W4GXY, 30) N.W. 3rd St., .Miami 35, Fla.

SACRIFICE: Going 6 meter mobile, must sacrifice Viking II factory wired, very good condition now on tht air, best offer over $125 takes it. Hary G. Hough Jr., W4AIO, 2119 Phillippi St., Sarasota, Fla. 924-2165.

FOR SALE: Four 304TL tubes, new but not in cartons $40 for all four. Need: KW bandswitching final tank 4-1000A tube socket and chimney. Jack Shartis K4HYL, 4 Wisconsin Dr., Pensacola, Fla.

FOR SALE: Professionally designed 65 watt all band phone — cw transmitter. Must be seen to be appreciated, sacrifice at $75. Dot or Tony Gelineau K4LEU/W4LEQ, 425 Falcon Ave., Miami Springs 66, Fla.

FOR SALE: National NC-300 receiver with xtal calib., also a speaker $190. Ranger xmtr factory wired $140. Johnson matchbox 275 W with directional coupler and indicator $45. All in fine condition. E. C. Peckham W4DSD, 4741 NE 5th Ave., Ft .Lauderdale, Fla .LO 4-2055.

FOR SALE: 100 Watt 2 meter station Gonset Communicator I, Gonset linear III both new condition $160. Guaranteed. Two air system sockets for 4X150 4X250B etc with Chimneys $3.50 each. J W.. Gregory K4OCK, 3000 SW 103 Ct., Miami 35, Fla CA 6-3434.

WANTED: 96 to 102 inch mobile whip, new or used in good shape. Earl Douglas Jensen K4DAD Box U2044, FSU, Tallahassee, phone 222-8000 Ext 2670.

FOR SALE: At cost price 200 printed standard message forms, padded in 50's postpaid anywhere in USA one buck Un.cle takes 20 cents of it for postage. Florida Skip, Box 501, Miami Springs 66, Fla.

FOR HALE: 2-4-125's at $4 each. ARC-5 transmitter converted to 20 meters $5. ARC-5 receiver $3 as is. DC-3. Dynamotor with relay $10. Many odds and ends. George Steait W4CBE. 014 Elfrida Ave., Sarasota, Fla.

FOR SALE: SX101 complete with Dow-key relay $265 Hav.e KWM-2, power supply hi Drake fonepatch for $1200 .Walter Edwards, W4MSC, 1650 NE 1st Ave.., Pompano Beach Fla. WH 2-2346.

FOR SALE: NC-200 receiver and matching speaker, looks and performs like new $125. Earl Carter, 910 Oriole Dr., Miami Springs 66, Fla. TU 7-4001.

WANTED: Moe large sharpe clear station photos with operators, diagrams (ready to print) and short news item. Ty us. Skip Box 501, Mia miSprings 66, Fla.

FOR SALE: ELMAC A-54 10 thru 80 meters. PMR-6 receiver, M-1070 power supply, Dow - key relay and mike, all in a wooden rack built of 2 by 2 and plywood $200. Pickup at 1621 Highland Ct., Cocoa, Fla. Nights or Sundays. Daytime at Rockledge Cab Co. Stand, also Hallicrafters S-38 at $30. Herb Peery K4RHG.

FOR SALE: 30 foot steel triangular, tip-over tower with guys. 800 watt, 80-10 pi network final amplifier with tubes and meters. Good price since going to college. Donald G. Bodner K4MZP, 254 NW 30th Terr., Ft. Lauderdale, Fla. Phone LU 3-4772.

FOR SALE: Scope Precision ES500 $60.00. Plate transformer 115 in 5000 out at 300 ma. $35.00. Choke 8 hy at 300 ma. $8.00. Halicrafter S-40A with Heath Q multiplier $60.00 Collins ART-13 $45. 851 tube 1 KW plus $25.00. Blue Raver bug $20.00. Sape recorder $40.00. C ooke, 601 SW 27th Ave., Ft. Lauderdale, Fla. Phone LU 1-9299.

AMATEUR EQUIPMENT SERVICING: Receiver alignment, transmitter repairs, frequency calibrations, etc. Any make or model, or homebrew! Reasonable rates. Jack Wainwright, W4IEH, 941 Country Club Circle, Ft. Lauderdale, Fla. LU 3-0631.

SOUTH MIAMI RADIO CLUB INC.

With 40 members, friends and visitors present, SOUTH MIAMI RADIO CLUB on the night of Friday March 16th, held one of the quietest meetings on record. Practically all business was dispensed with to first view a sound film loaned us by the Owensboro tube manufacturing plant of the General Electric Company, titled "THE T E A C H E R WORE WHITE." During the film showing, hardly more than an occasional chuckle broke the silence, other then the sound from the loudspeaker.

The picture was enlivened by a light romance woven through the story of a young electronics engineer's early employment in the GE Organization. But the serious side of tube design, production and production automation was skillfully threaded into the story. All of us certainly learned a great deal from it.

Following the picture, one of GE's tube design engineers, Mr. Rollin J. Sloan, talked for the best part of an hour on tube designing and production problems, how trace elements in metals and other tube components can upset design calculations until remedied, as well as many other phases of this interesting subject. Again, d u r i n g Mr. Sloan's talk, silence prevailed, with everyone sitting on the edge of their chairs to catch every word. At the end of his talk, Mr. Sloan was besieged with questions.

Prior to the meeting, Mr. Sloan commented that although he had spoken before numerous engineer meetings, IRE groups, and longhairs", he was always a little "on edge" before speaking before a ham group, as they could throw him more "deep curve" questions than any of the other groups. We didn't notice him "stumped" very long!

Just before the close of the meeting at nearly 11 pm, door prize goodies were passed out in the form beginning with tube and transistor handbooks and winding up with samples of new GE "Compact r o n" tubes. Furthermore, there were enough to go around so that everyone present got a door prize of one sort or another.

What more can you ask from a Radio Club Meeting!!!

These happy smiles belong to the Ft. Pierce Radio Club. Seated l to r: Bill Britton, Bob K4ZWG, Jean K4JZK, George K4DBT, Mary KN4BGK and Ann K4RDX (Floridora Correspondent) 2nd row: Grover W4DFZ, Joe W4BBE (EC Indian River Co.), Jake W4NTA, Paul K4WRL and Ed Young C. D. director, St. Lucie Co. 3rd row: Gene K4DPQ, Geo K4KGB (EC Martin Co.) Jess K4NKO, Deek W4CUB/4, Bob KN4AKU, Rollin K4UZU (EC St. Lucie Co.) and Earl W4RGJ. (Florida Skip Photo)

We though you would like to meet Cliff Corne K9EAB of Peoria, Ill. Cliff was nominated and received our FLORIDA SKIP AWARD for his outstanding traffic work last year. As you can see he has "a few" other awards which he worked mighty hard for! K9EAB is working for his WAFC certificate and request the Florida gang be on the look-out for him, on most any band. Good luck Cliff.

PENSACOLA VHF HAM OF THE YEAR, Doug Mor[illegible] W4IMY, was recently voted VHF Ham of the year by the Pensacola VHF ARC. Pictured above is SCM, Frank Butler, W4RKH making the presentation. Left to right: K4QAC Vice-pres., K4RKH SCM, W4EQR Pres., W4IMY, and K4LAN Treas. (Photo via K4SWQ)